SCHEMATIC DIAGRAM

CRUMAR®

Musical Instruments

mod.

Bit one

⊙≺	FEMALE CONNECTOR SYMBOL (es. J 2/1)
⊙→	PLUG IN CONNECTOR SYMBOL
○	WIRE SOLDERING POINT
□	TEST POINT (T P...)
•	CONNECTING POINT (ON p.c.b.)
▭•	METALLIC FILM RESISTOR 1%

ALL resistors 1/4 w unless otherwise indicated

ALL tabswitches shown in OFF position

ALL keyswitches shown in OFF position

See part list for component part numbers

CRUMAR RESERVES THE RIGHT TO CHANGE SPECIFICATIONS AND DESIGNS, WITHOUT NOTICE AND LIABILITY.

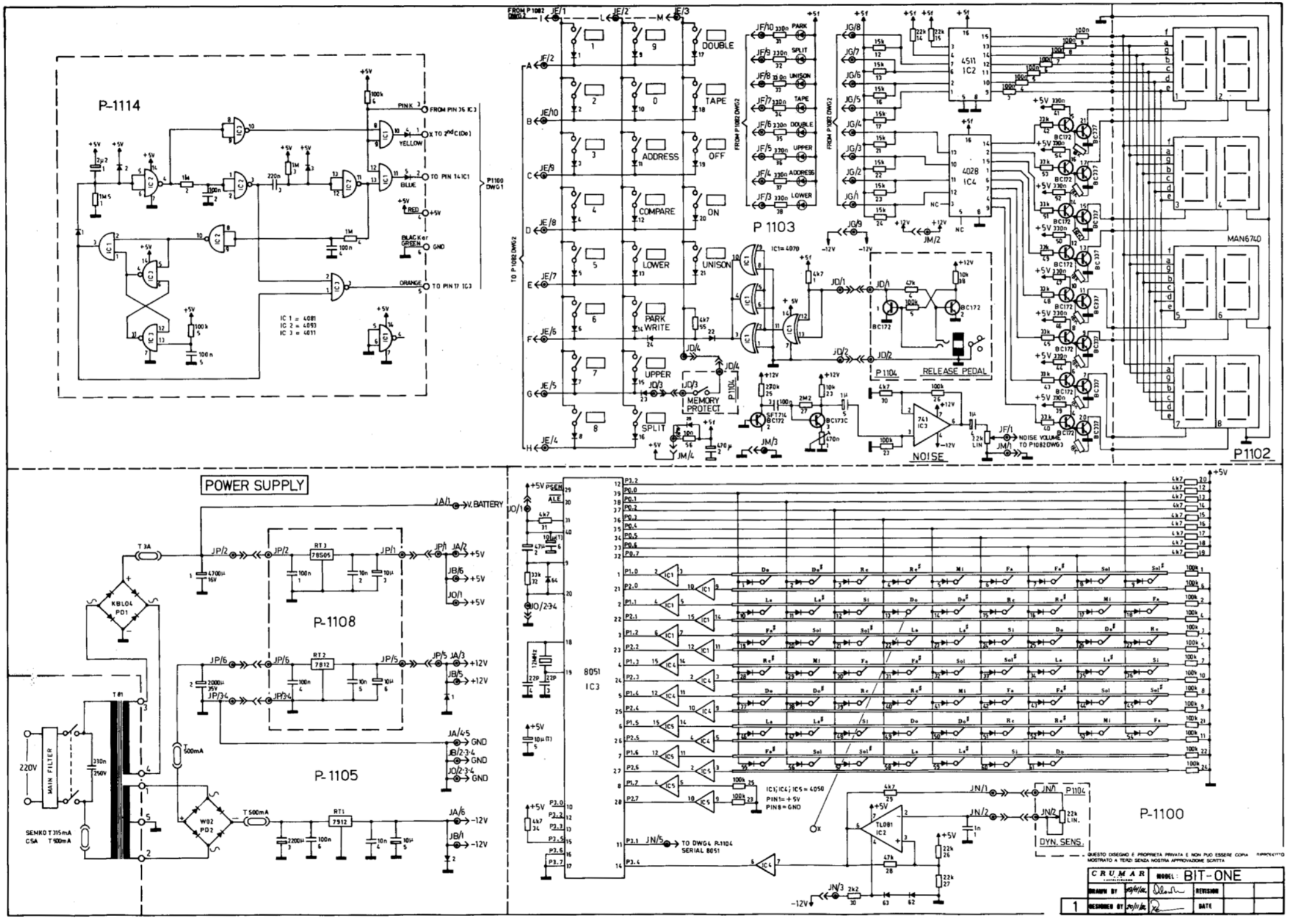
P-1114
IC 1 = 4081
IC 2 = 4093
IC 3 = 4011
P 1103
P 1104
RELEASE PEDAL
MEMORY PROTECT
NOISE
NOISE VOLUME TO P1082 DWG3
DYN. SENS.
MAN6740
P1102
POWER SUPPLY
P-1108
P-1105
P-1100
8051 IC3
IC1, IC4, IC5 = 4050
PIN1 = +5V
PIN8 = GND
SERIAL 8051
TO DWG4 P-1104
SEMKO T 315mA
CSA T 500mA
220V
MAIN FILTER
KBL04 PD1
W02 PD2
QUESTO DISEGNO È PROPRIETÀ PRIVATA E NON PUÒ ESSERE COPIA MOSTRATO A TERZI SENZA NOSTRA APPROVAZIONE SCRITTA
CRUMAR
MODEL: BIT-ONE
DRAWN BY
DESIGNED BY
REVISION
DATE

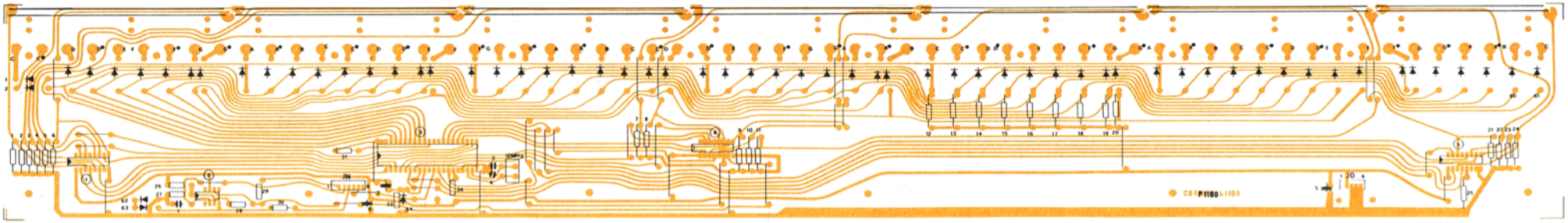

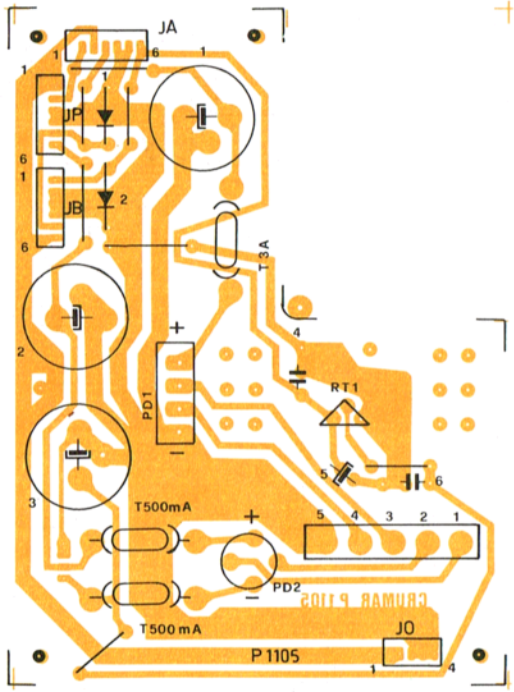

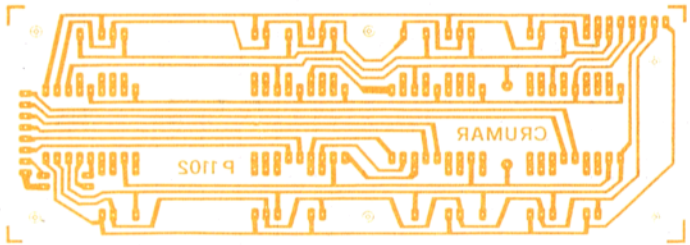

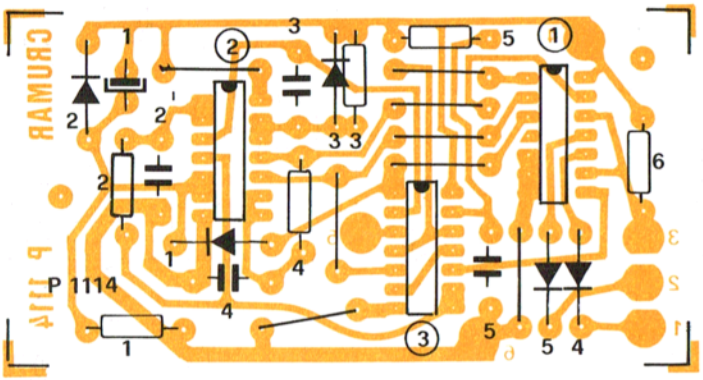

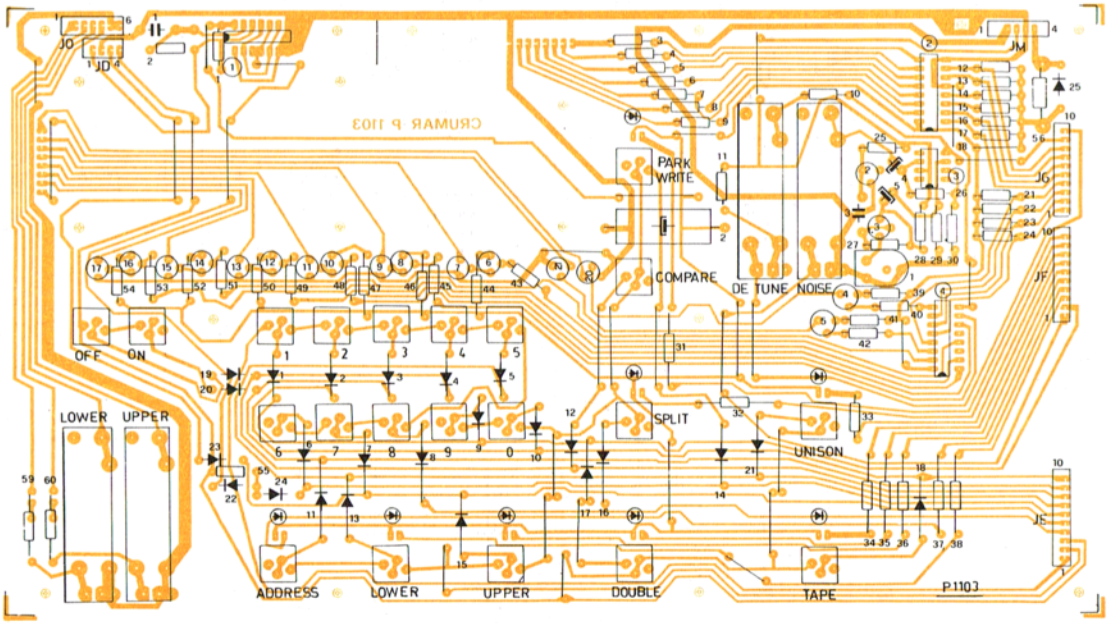

QUESTO DISEGNO È PROPRIETÀ PRIVATA E NON PUÒ ESSERE COPIATO RIPRODOTTO MOSTRATO A TERZI SENZA NOSTRA APPROVAZIONE SCRITTA

CRUMAR		MODEL: BIT-ONE			
1A	DRAWN BY		REVISION		
	DESIGNED BY		DATE		

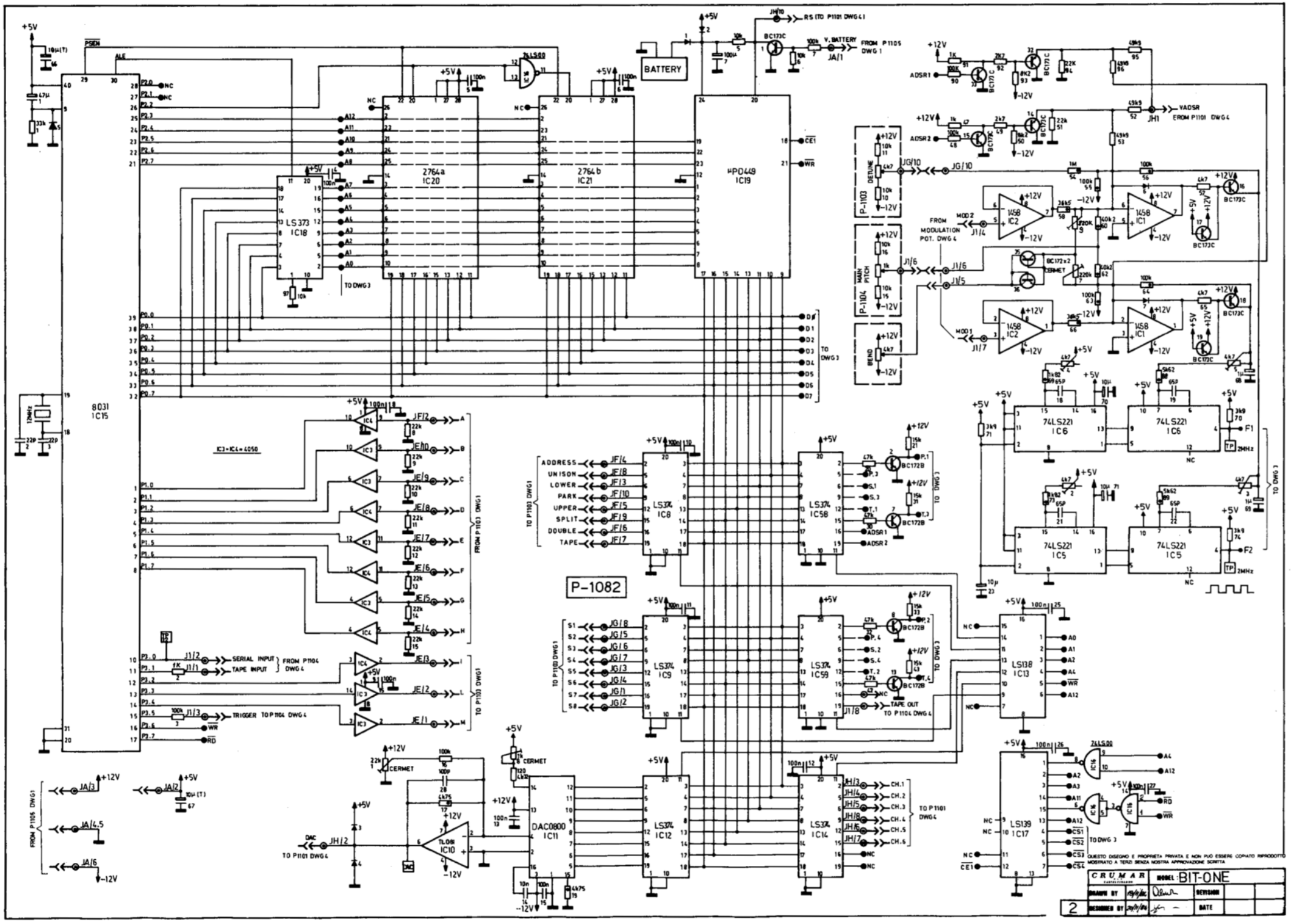
8031
IC15
LS373
IC18
2764a
IC20
2764b
IC21
μPD449
IC19
BATTERY
P-1082
P-1103
P-1104
74LS221
IC6
74LS221
IC5
LS374
IC8
LS374
IC9
LS374
IC12
LS374
IC14
LS138
IC13
LS139
IC17
DAC0800
IC11
TL081
IC10
4050
1458
IC2
1458
IC1
BC173C
BC172B
BC172x2
CERMET
SERIAL INPUT
TAPE INPUT
TRIGGER TO P1104 DWG 4
TAPE OUT
TO P1104 DWG 4
FROM P1105 DWG 1
TO P1101 DWG4
TO DWG 3
FROM P1103 DWG1
TO P1103 DWG1
FROM P1104 DWG 4
FROM MODULATION POT. DWG 4
FROM P1101 DWG4
RS (TO P1101 DWG4)
V.BATTERY
FROM P1105 DWG 1
ADDRESS
UNISON
LOWER
PARK
UPPER
SPLIT
DOUBLE
TAPE
DETUNE
MAIN PITCH
BEND
ADSR1
ADSR2
VADSR
QUESTO DISEGNO E PROPRIETÀ PRIVATA E NON PUÒ ESSERE COPIATO RIPRODOTTO MOSTRATO A TERZI SENZA NOSTRA APPROVAZIONE SCRITTA
CRUMAR
MODEL: BIT-ONE
DRAWN BY
DESIGNED BY
REVISION
DATE
2

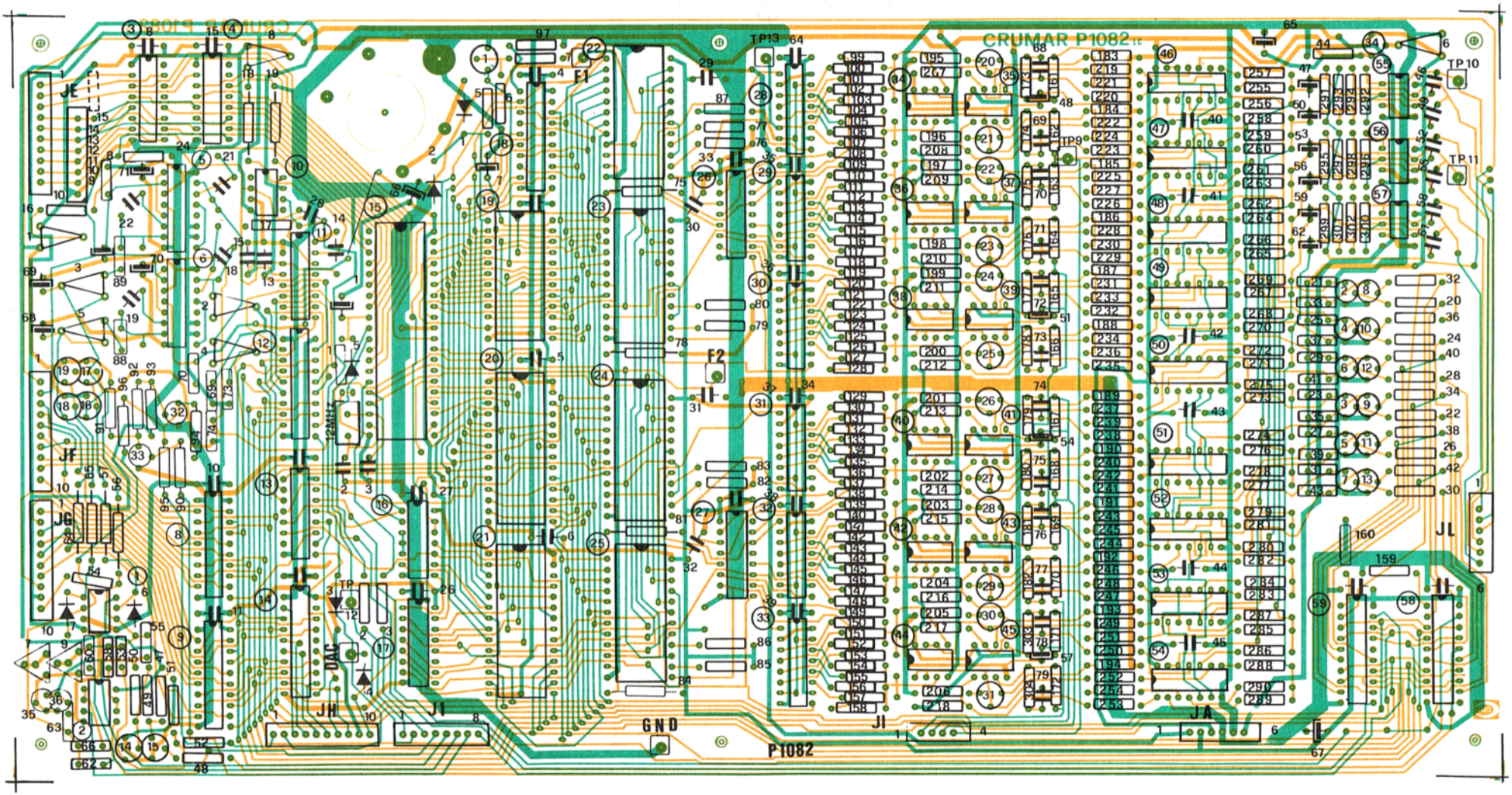

QUESTO DISEGNO È PROPRIETÀ PRIVATA E NON PUÒ ESSERE COPIATO RIPRODOTTO
MOSTRATO A TERZI SENZA NOSTRA APPROVAZIONE SCRITTA

	CRUMAR	MODEL: BIT-ONE		
	DRAWN BY		REVISION	
2A	DESIGNED BY		DATE	

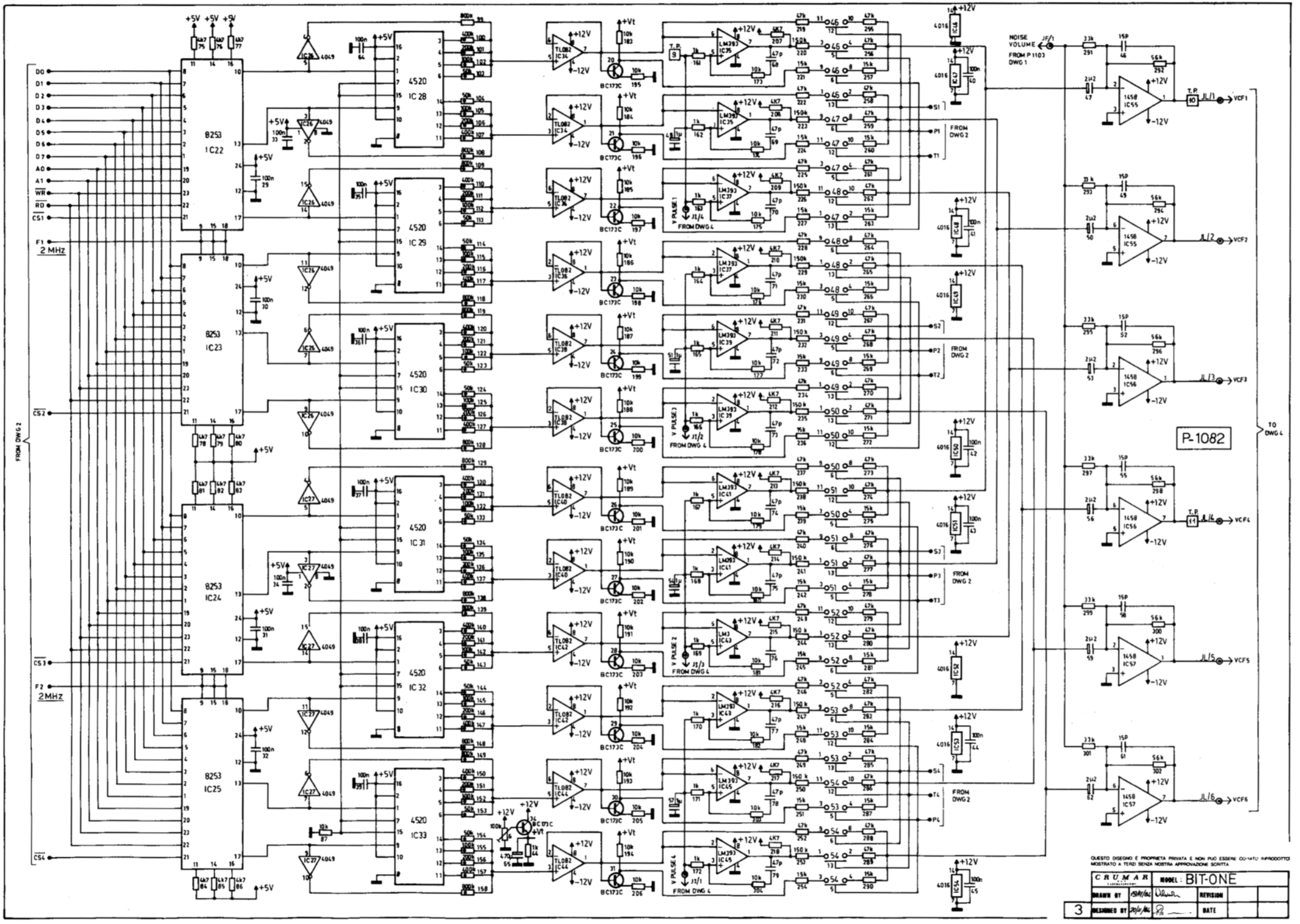
8253 IC22
8253 IC23
8253 IC24
8253 IC25
4520 IC28
4520 IC29
4520 IC30
4520 IC31
4520 IC32
4520 IC33
F1 2 MHz
F2 2MHz
FROM DWG 2
TO DWG 4
NOISE VOLUME
FROM P 1103 DWG 1
FROM DWG 2
FROM DWG 4
V PULSE 1
V PULSE 2
V PULSE 3
V PULSE 4
VCF1
VCF2
VCF3
VCF4
VCF5
VCF6
P-1082
QUESTO DISEGNO E PROPRIETÀ PRIVATA E NON PUÒ ESSERE CO-IATO RIPRODOTTO MOSTRATO A TERZI SENZA NOSTRA APPROVAZIONE SCRITTA
CRUMAR
MODEL: BIT-ONE
DRAWN BY
DESIGNED BY
REVISION
DATE
3

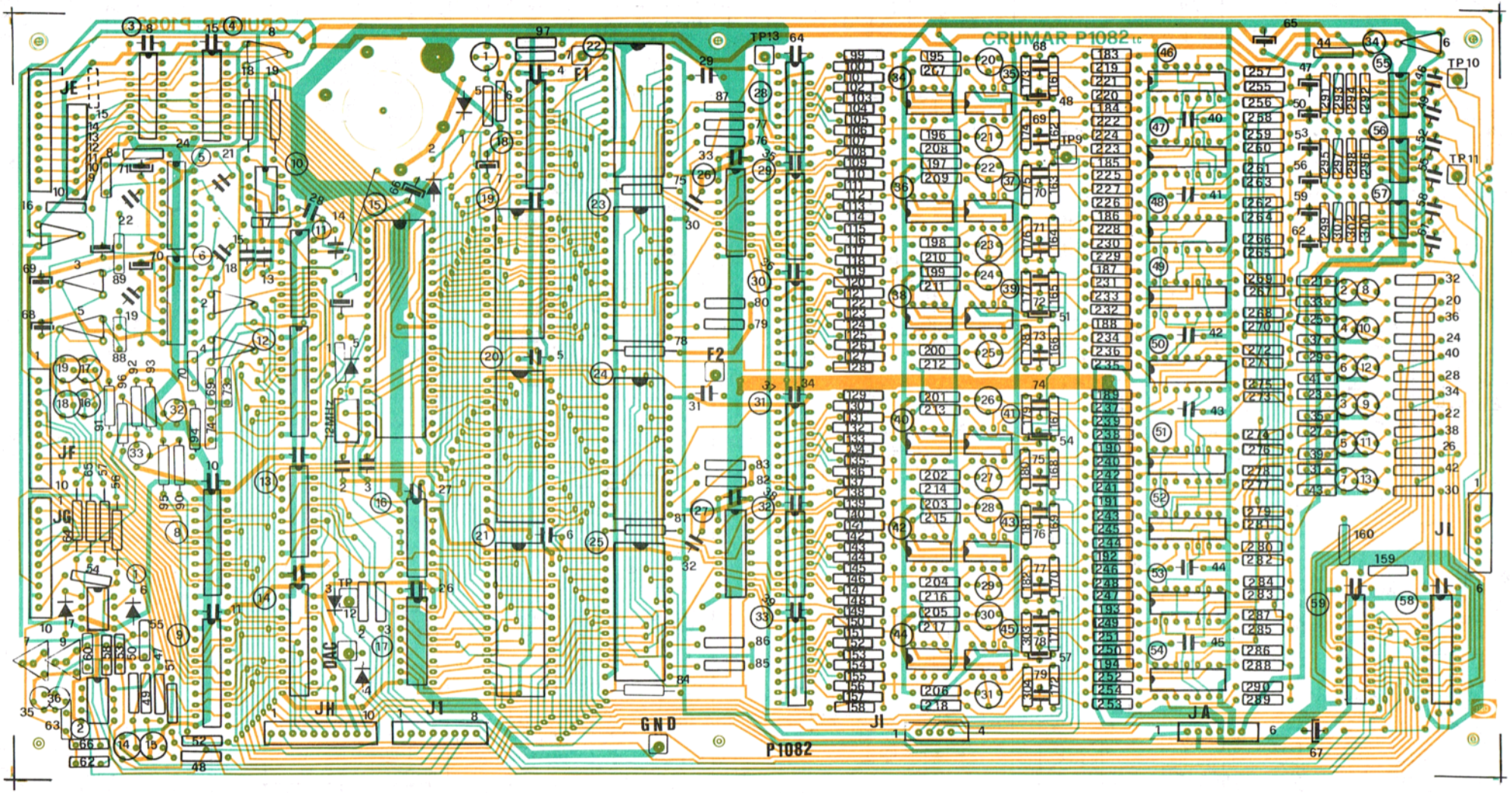

QUESTO DISEGNO È PROPRIETÀ PRIVATA E NON PUÒ ESSERE COPIATO RIPRODOTTO MOSTRATO A TERZI SENZA NOSTRA APPROVAZIONE SCRITTA

	CRUMAR	MODEL: BIT-ONE			
	DRAWN BY		REVISION		
3A	DESIGNED BY		DATE		

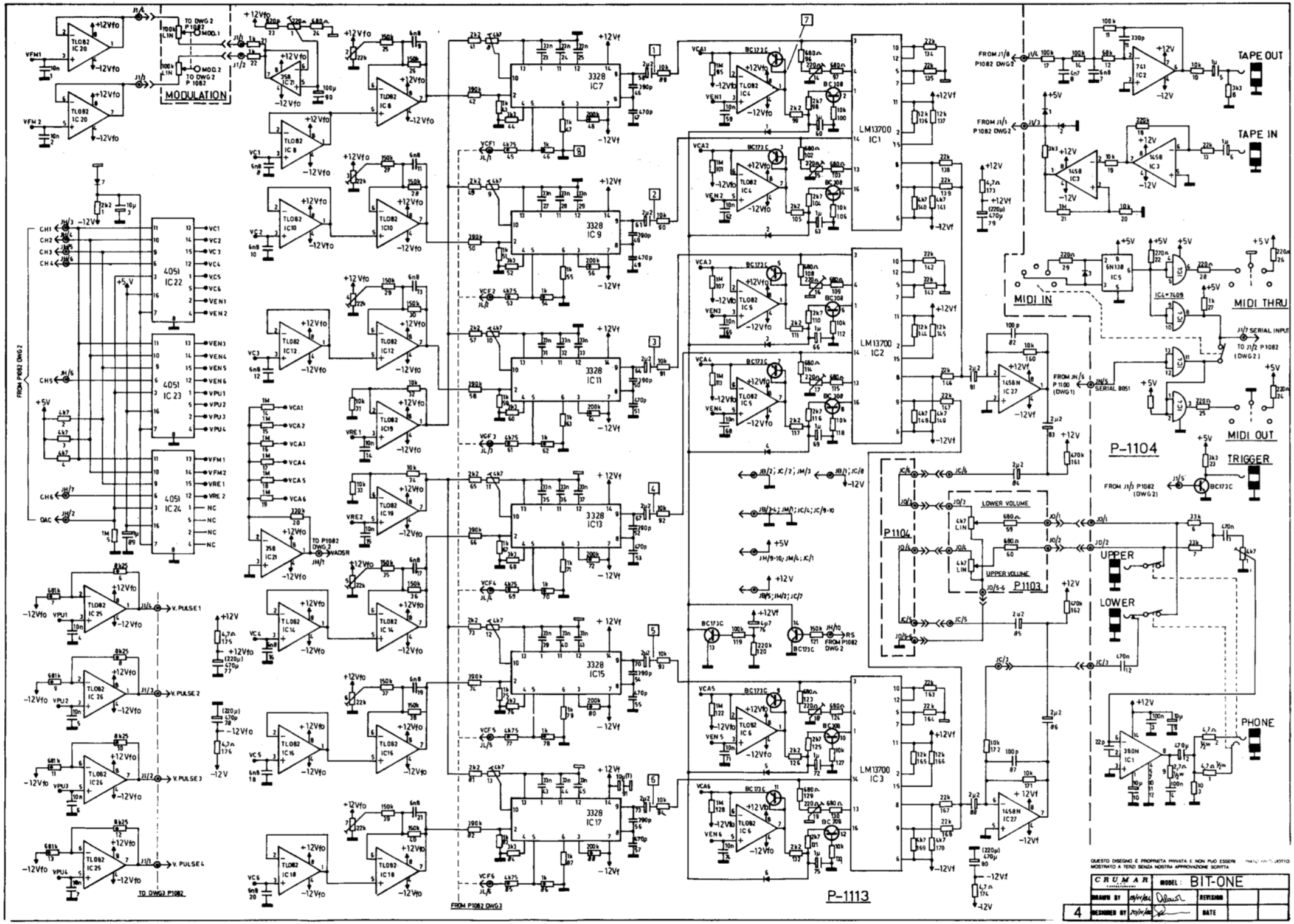
MODULATION
TO DWG 2 P1082
MOD. 1
MOD. 2
TO DWG 2 P 1082
TO DWG3 P1082
FROM P1082 DWG 2
FROM P1082 DWG3
TO P1082 DWG 2
V. PULSE 1
V. PULSE 2
V. PULSE 3
V. PULSE 4
LM13700 IC1
LM13700 IC2
LM13700 IC3
P-1113
P-1104
P1104
P1103
LOWER VOLUME
UPPER VOLUME
UPPER
LOWER
TAPE OUT
TAPE IN
MIDI IN
MIDI THRU
MIDI OUT
TRIGGER
PHONE
FROM J1/8 P1082 DWG2
FROM J1/1 P1082 DWG2
J1/7 SERIAL INPUT
TO J1/2 P1082 (DWG2)
FROM J1/5 P 1100 (DWG1)
SERIAL 8051
FROM J1/3 P1082 (DWG2)
QUESTO DISEGNO E PROPRIETA PRIVATA E NON PUO ESSERE MOSTRATO A TERZI SENZA NOSTRA APPROVAZIONE SCRITTA
CRUMAR
MODEL: BIT-ONE
DRAWN BY
DESIGNED BY
REVISION
DATE
4

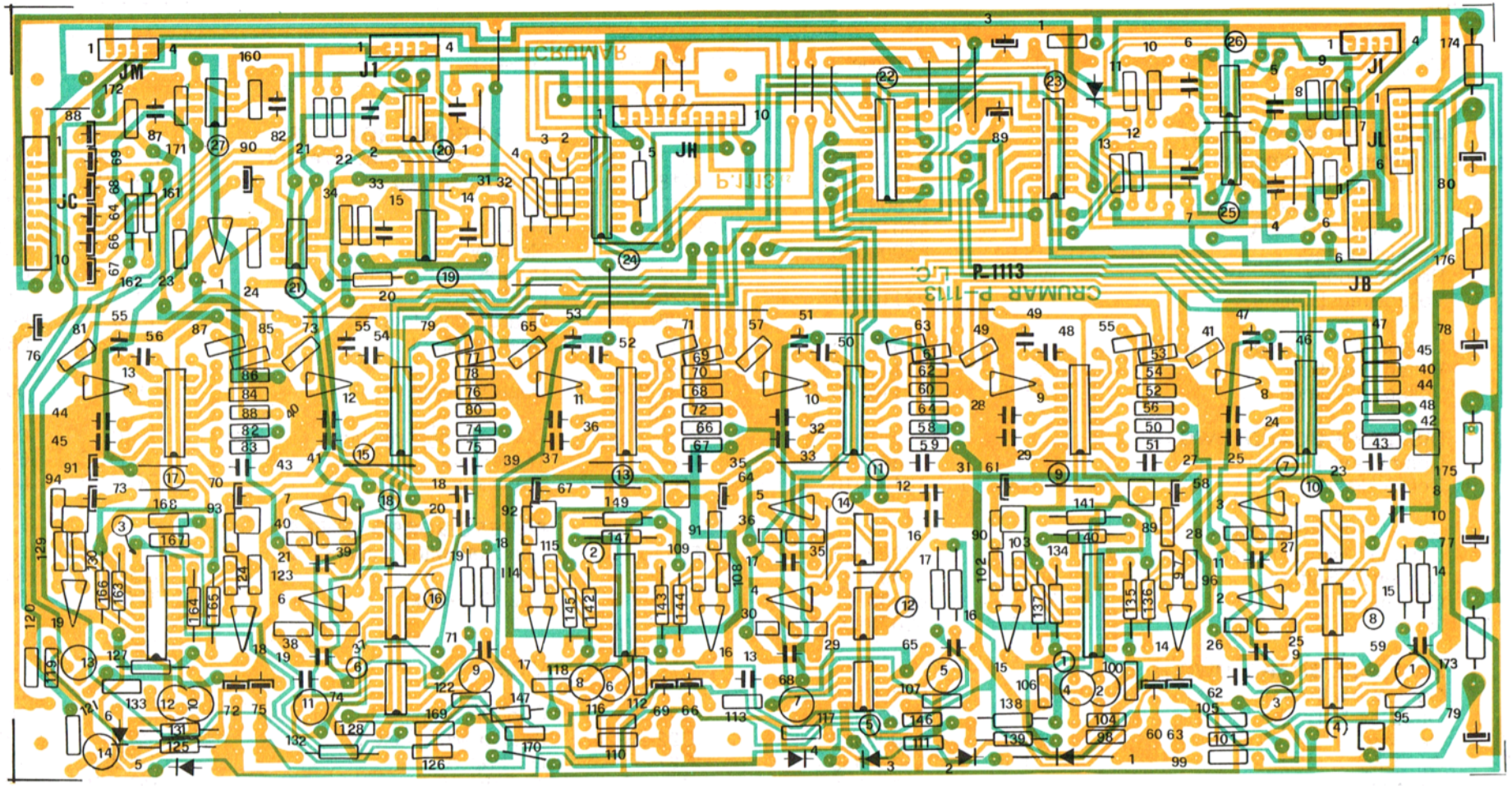

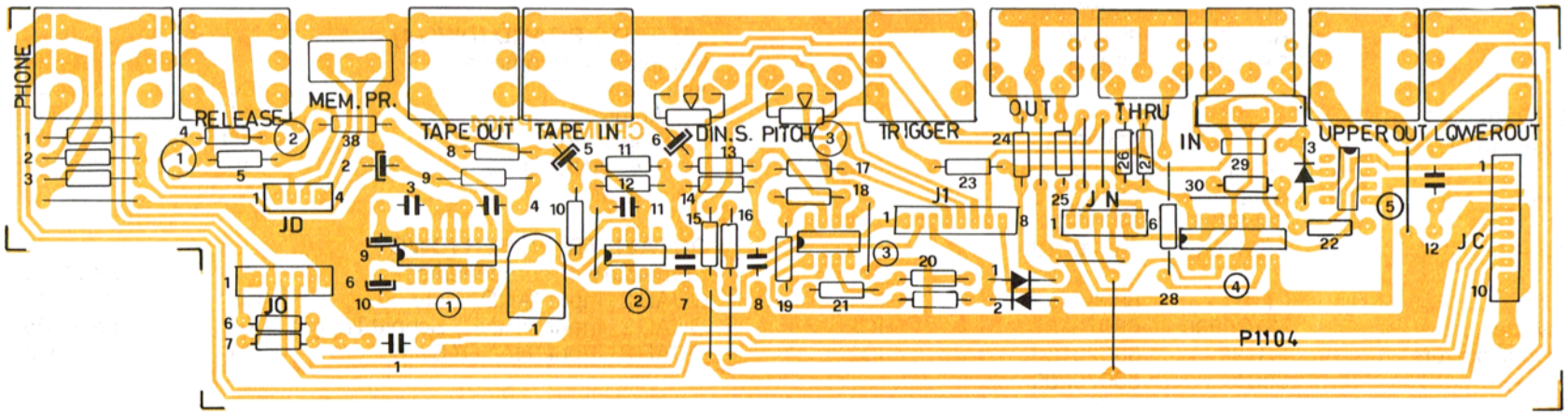

QUESTO DISEGNO È PROPRIETÀ PRIVATA E NON PUÒ ESSERE COPIATO RIPRODOTTO MOSTRATO A TERZI SENZA NOSTRA APPROVAZIONE SCRITTA

	CRUMAR	MODEL: BIT-ONE			
	DRAWN BY	15/11/86	REVISION		
4A	DESIGNED BY	20/11/86	DATE		

Schem. Ref.	Circuit	Type	Part Code
	POWER SUPPLY (DWG 1)		
P-1105 (Semko)	Complete with components		978002863
	Trasformer T81 Semko		18010137
P1105 (C.S.A.)	Complete with components		978002864
	Trasformer T81 CSA		18010138
PD1	Rectifier bridge	KBL04	66000006
PD2	Rectifier bridge	W02	66000001
RT1	Voltage regulator	7912	62110037
P1108	Complete with components		978002867
RT2	Voltage regulator	7812	62110027
RT3	Voltage regulator	75505	62110043
	DISPLAY'S BOARD (DWG 1)		
P1102	Complete with components		978002860
	Double display	MAN6740	10120016
	KEY SWITCHES BOARD (DWG 1)		
P1100	Complete with components		978002858
IC1-4-5	Non invert. Buffers	4050	68000085
IC2	Op. Ampl.	TL081	68030205
IC3	Micro	8051	68070208
	SWITCHES BOARD (DWG 1)		
P1103	Complete with components		978002861
IC1	Quad. ex. "OR" Gate	4070	68000070
IC2	Decoder	4511	68000086
IC3	Op. Ampl.	741	68000059
IC4	Decoder	4028	68000091
TR	Transistors	BC173C	62120003
TR	Transistors	BC172B	62210003
TR	Transistors	BC337-40	62110038
TR	Transistors	SFT714	62210002
	MICRO BOARD (DWG 2-3)		
P1082	Complete with components		978002835
IC1-2-55-56-57	Dual. Op. Ampl.	1458N	68000053
IC3-4	Non invert. Buffers.	4050	68000085
IC5-6	Master Oscillator	74LS221	68000058
IC8-9-12-14 58-59	Transparent latch	LS374	68020213
IC10	Op. Ampl.	TL071	68030182
IC11	Dig. Analog. Converter	DAC0800	68070197
IC13	Decoders and Demultiplexers	LS138	68020153
IC15	Micro	8031	68070209
IC16	Positive "NAND" Gate	74LS00	68000117

MODEL: BIT ONE ELECTRONIC COMPONENT LIST

Schem. Ref.	Circuit	Type	Part Code
	MICRO BOARD (DWG 2-3)		
IC17	Decoders and Demultiplexers	LS139	68020215
IC18	Transparent latch	LS373	68020214
IC19	RAM	µPD449	68070216
IC20	Memory	2764a	68040211
IC21	Memory	2764b	68040211
IC22-23-24-25	Programmable Oscillator	8253	68070210
IC26-27	Inv. Buffers	4049	68010131
IC28 ÷ 33	Dual up. counters	4520	68000045
IC34-36-38-40 42-44	Dual Op. Ampl.	TL082	68030163
IC35-37-39-41 43-45	Dual Op. Ampl.	LM393	68030222
IC46 ÷ 54	Quad analog. switches	4016	68000072
TR	Transistors	BC173C	62120003
TR	Transistors	BC172B	62210003
	FILTERS BOARD (DWG 4)		
P1113	Complete with components		978002872
IC1-2-3	V.C.A.	LM13700	68030219
IC4-5-6-8-10 12-14-16-18 19-20-25-26	Dual Op. Ampl.	TL082	68030163
IC7-9-11-13 15-17	V.C.F.	3328	68030223
IC21	Dual Op. Ampl.	358	68000093
IC22-23-24	Analog. Multiplexers.	4051	68010154
IC27	Dual Op. Ampl.	1458N	68000053
TR	Transistors	BC173C	62120003
TR	Transistors	BC308	62210001
	OUTPUTS BOARD (DWG 4)		
P1104	Complete with components		978002862
IC1	Amplifier	380N	68030203
IC2	Op. Ampl.	741	68000059
IC3	Dual Op. Ampl.	1458	68000054
IC4	Positive "AND" Gate	7409	68020221
IC5	Opto isolator	6N138	68070220
	OCTAVE TRANSFER (DWG 1)		
P114	Complete with components		978002873
IC1	QUAD 2 - Input "AND" Gate	4081	68000019
IC2	QUAD 2 - Input "NAND" Schnitt Trigger	4093	68000050
IC3	QUAD 2 - Input "NAND" Gate	4011	68000034