Service Manual

OB-SX

Polyphonic Synthesizer

PRELIMINARY

First Edition
November 1980

Oberheim Electronics, Inc.
1455 19th Street
Santa Monica, CA 90404

OB-SX DIP SWITCH OPERATION

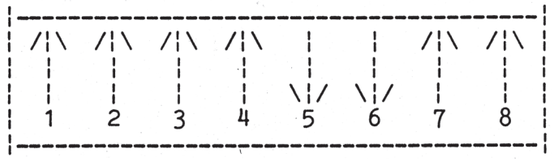

FOUR VOICE
AUTO-TUNE ENABLED

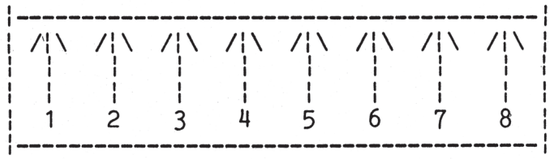

SIX VOICE
AUTO-TUNE ENABLED

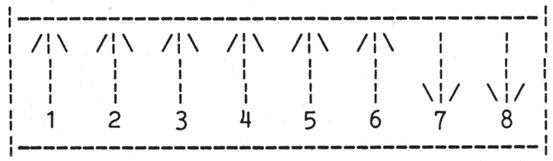

SIX VOICE
AUTO-TUNE DISABLED

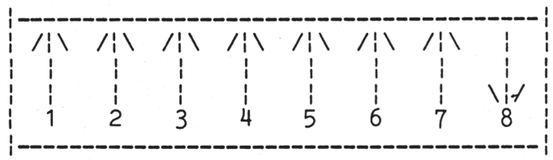

SIX VOICE
AUTO-TUNE ENABLED
OSCILLATOR 2 OFF

SIX VOICE
AUTO-TUNE ENABLED
OSCILLATOR 1 OFF

NOTE: WHEN EITHER SWITCH SEVEN OR EIGHT OR BOTH ARE DOWN, ALL FREQUENCY AND PULSE WIDTH MODULATION IS DEFEATED.

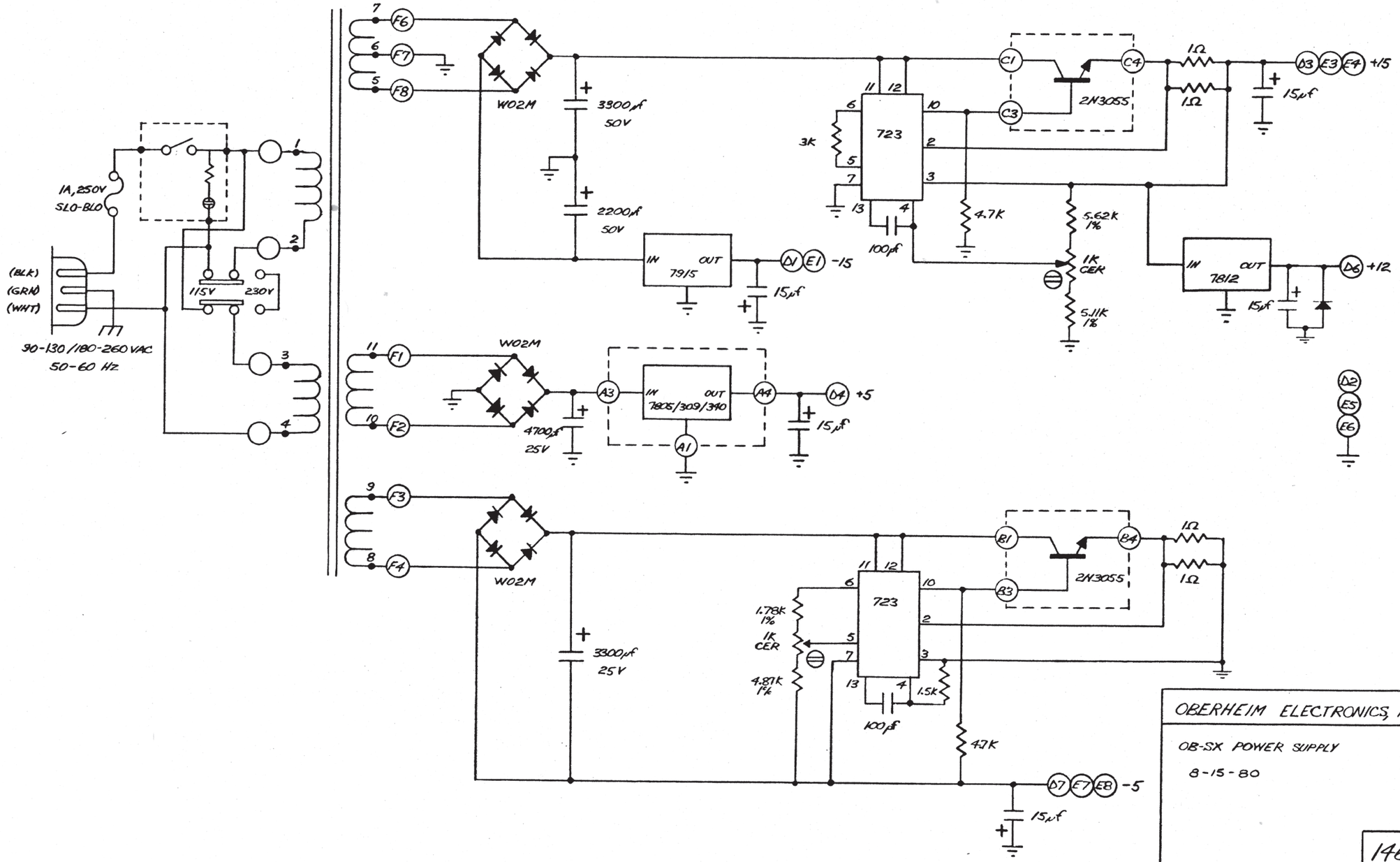
1A, 250V
SLO-BLO
(BLK)
(GRN)
(WHT)
90-130/180-260 VAC
50-60 Hz
115V
230V
W02M
3900µf
50V
2200µf
50V
79/15
-15
15µf
723
3K
100pf
4.7K
5.62K
1%
1K
CER
5.11K
1%
2N3055
1Ω
1Ω
15µf
+15
7812
+12
15µf
W02M
4700µf
25V
7805/309/340
+5
15µf
W02M
3300µf
25V
1.78K
1%
1K
CER
4.87K
1%
1.5K
100pf
47K
-5
15µf
OBERHEIM ELECTRONICS, INC.
OB-SX POWER SUPPLY
8-15-80
1462

EPROM SELECT
(MAKE BEFORE BREAK)
REAR PANEL

OBERHEIM ELECTRONICS, INC

SCHEMATIC
OB-SX PROCESSOR & CONTROL BOARD

8-15-80

SHEET 1 OF 5

1469

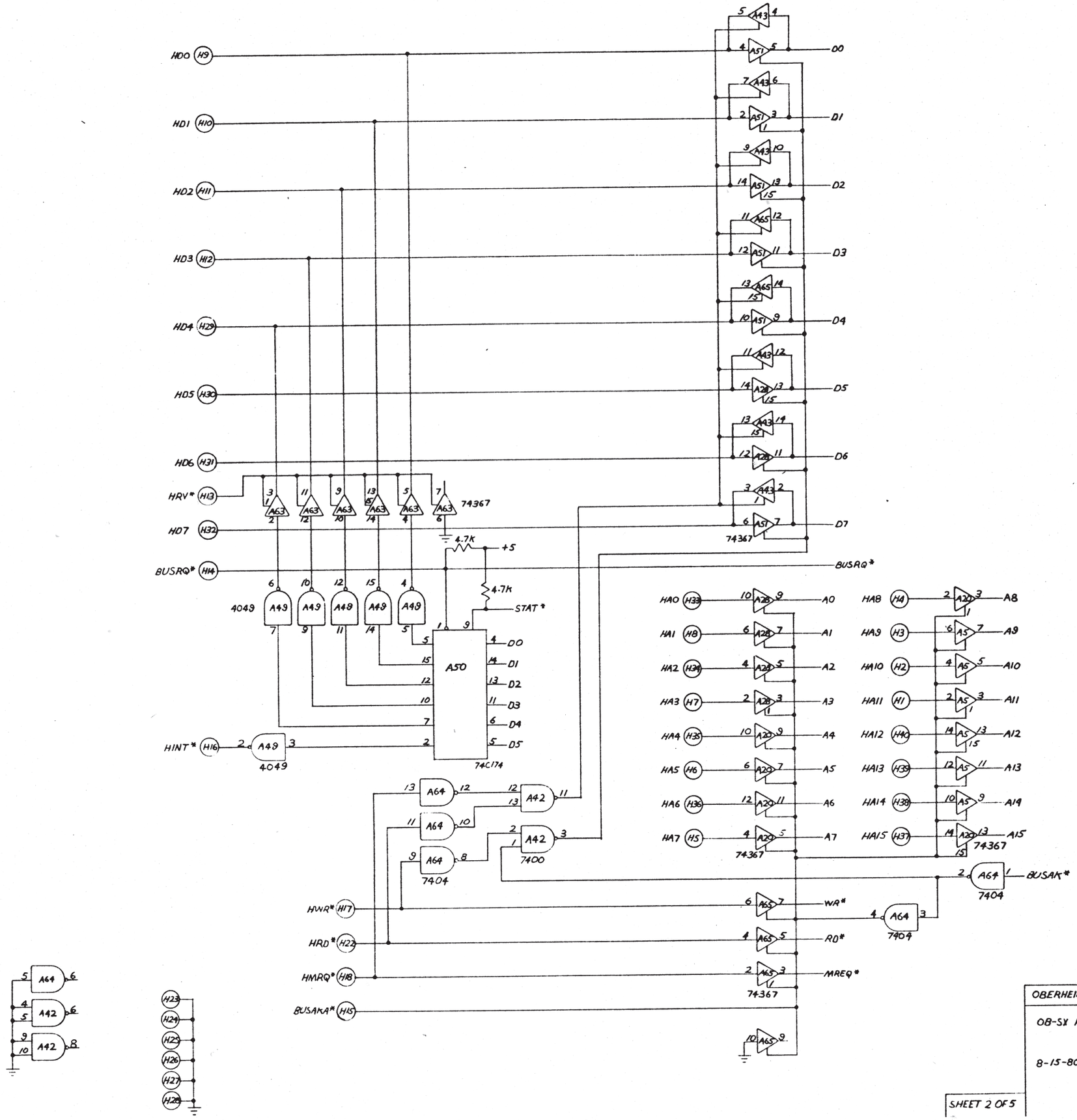

OBERHEIM ELECTRONICS

OB-SX PROCESSOR & CONTROL BOARD

8-15-80

SHEET 2 OF 5

1469

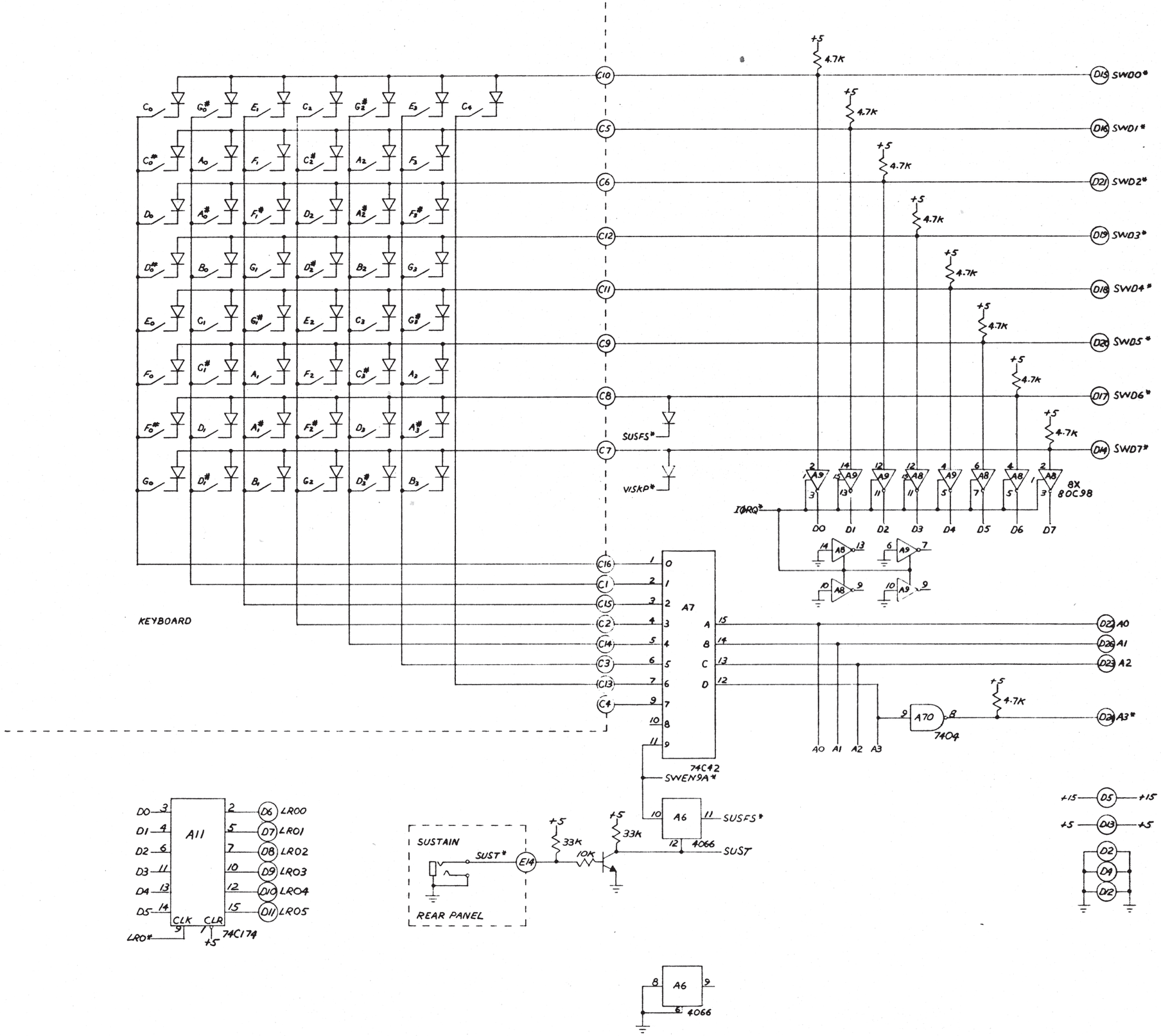

OBERHEIM ELECTRONICS, INC.

SCHEMATIC – OB-SX PROCESSOR & CONTROL BOARD

8-15-80

SHEET 3 OF 5

1469

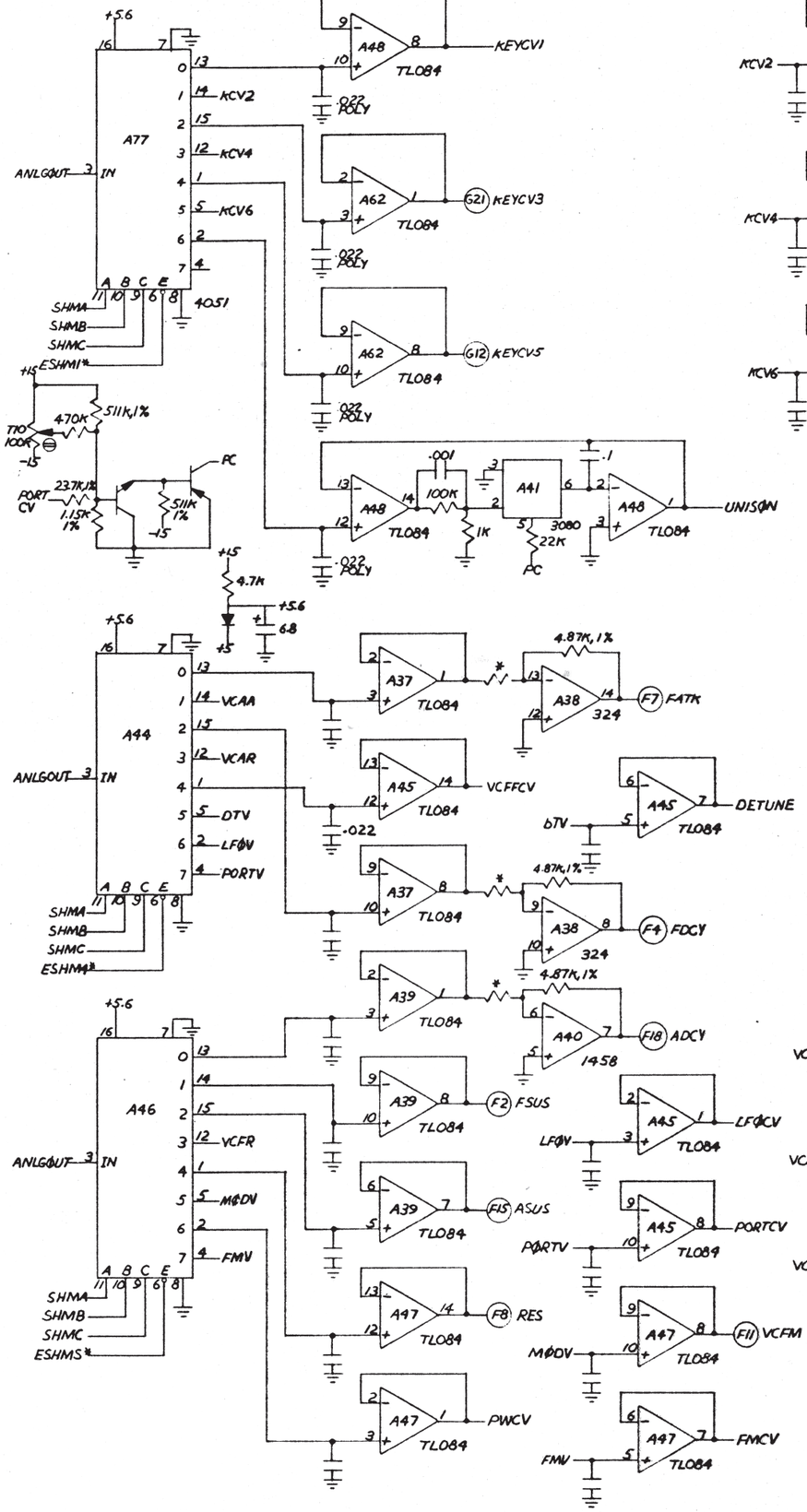

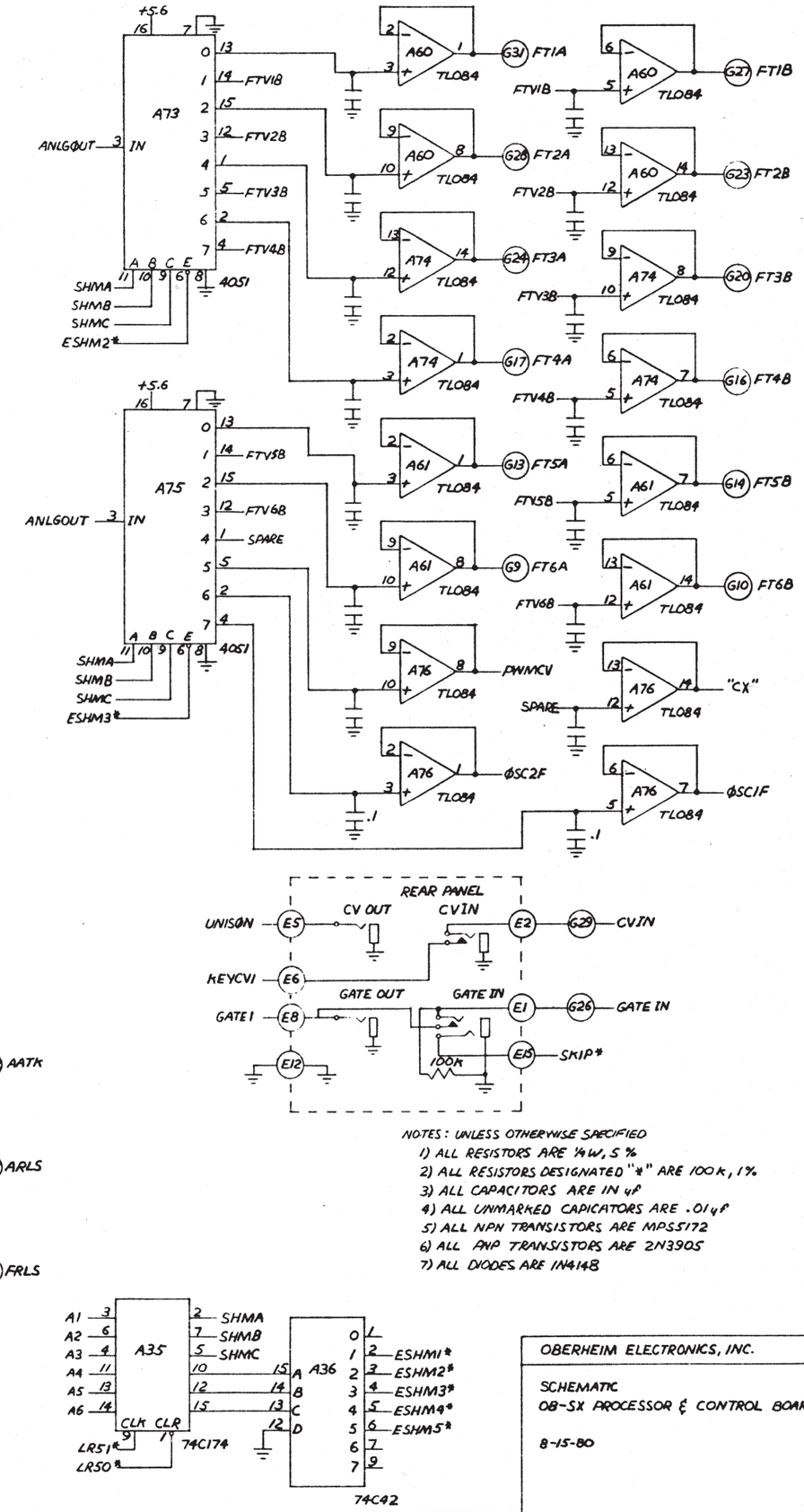

OBERHEIM ELECTRONICS, INC.

SCHEMATIC
08-SX PROCESSOR & CONTROL BOARD

8-15-80

SHEET 4 OF 5

1469

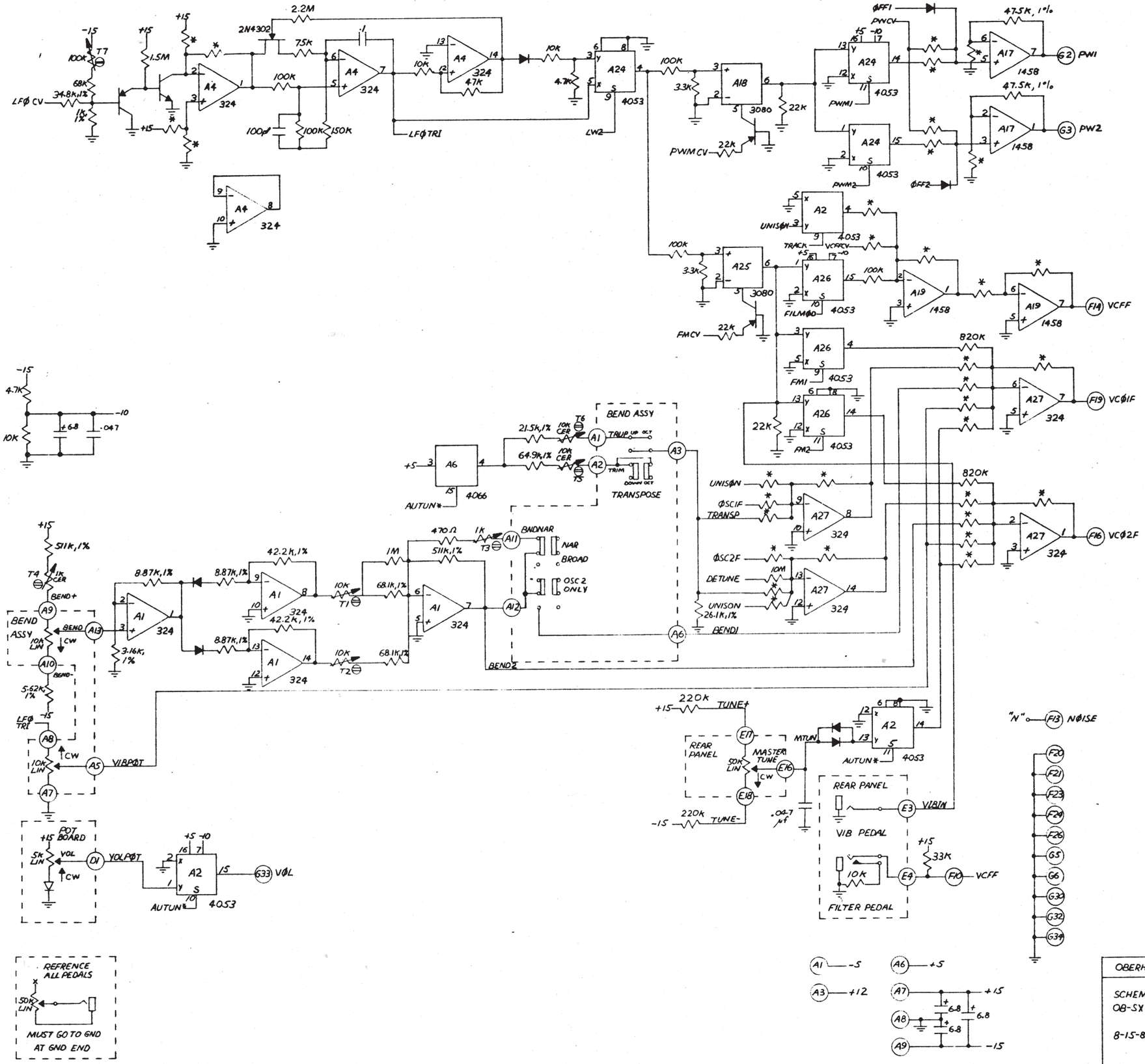

OBERHEIM ELECTRONICS INC.

SCHEMATIC
OB-SX PROCESSOR & CONTROL BOARD

8-15-80

SHEET 5 OF 5

1469

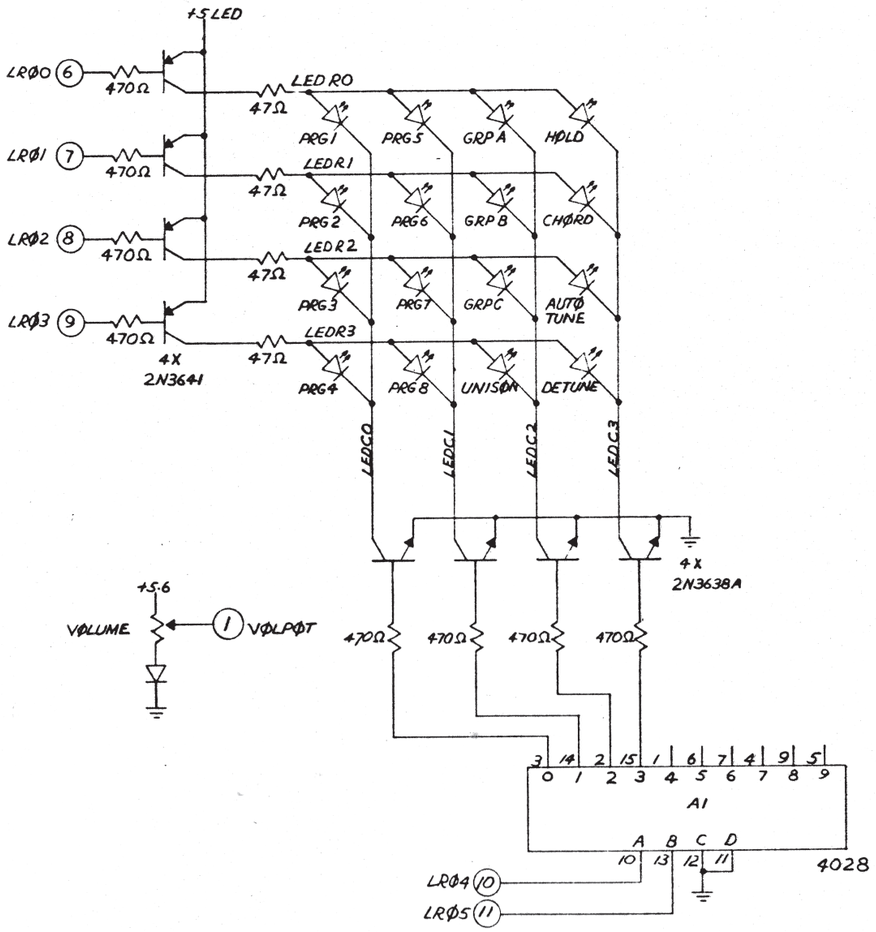

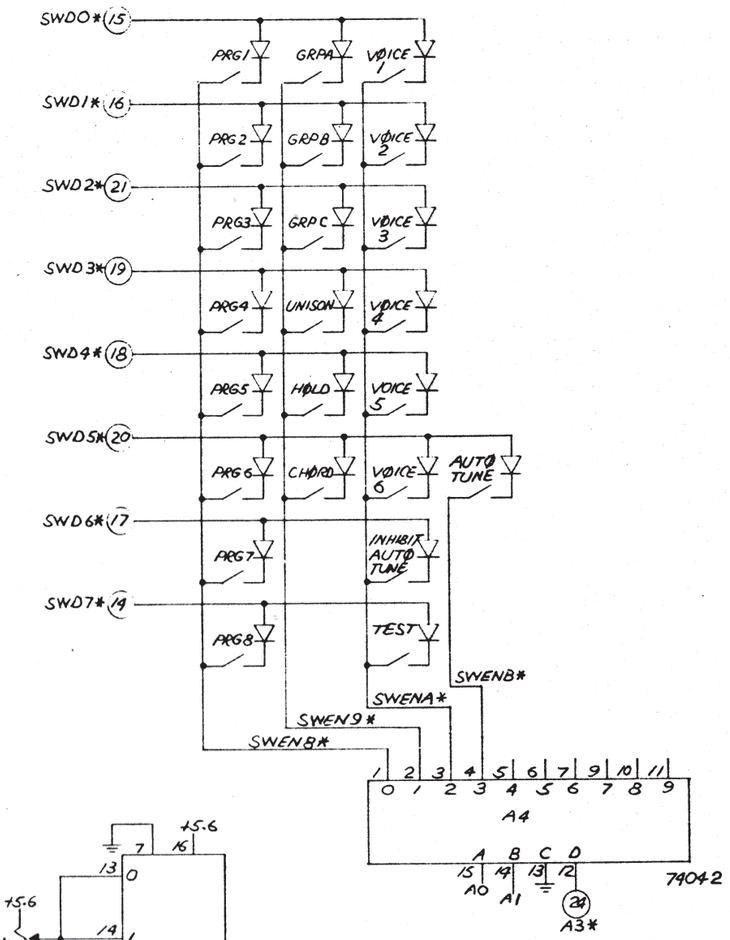

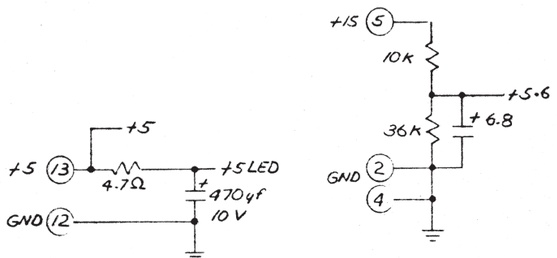

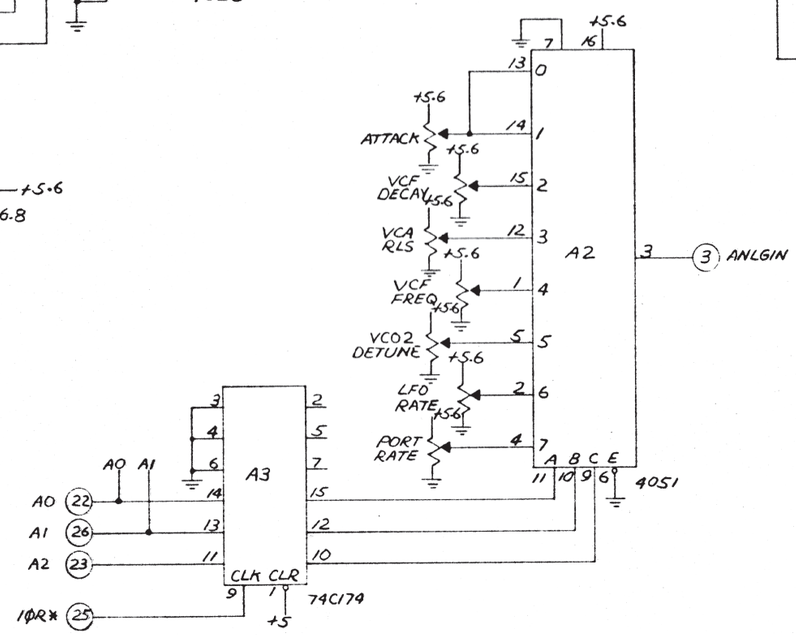

NØTES– UNLES INDECATED ØTHERWISE

1) ALL RESISTØRS ARE 1/4 W, 5%
2) ALL CAPACITØRS ARE IN μf
3) ALL DIØDES ARE IN4148
4) ALL PØTS 50K LIN CW↑

OBERHEIM ELECTRONICS INC.	
SCHEMATIC – OB-SX POT BOARD	
8-15-80	J.R.

1470

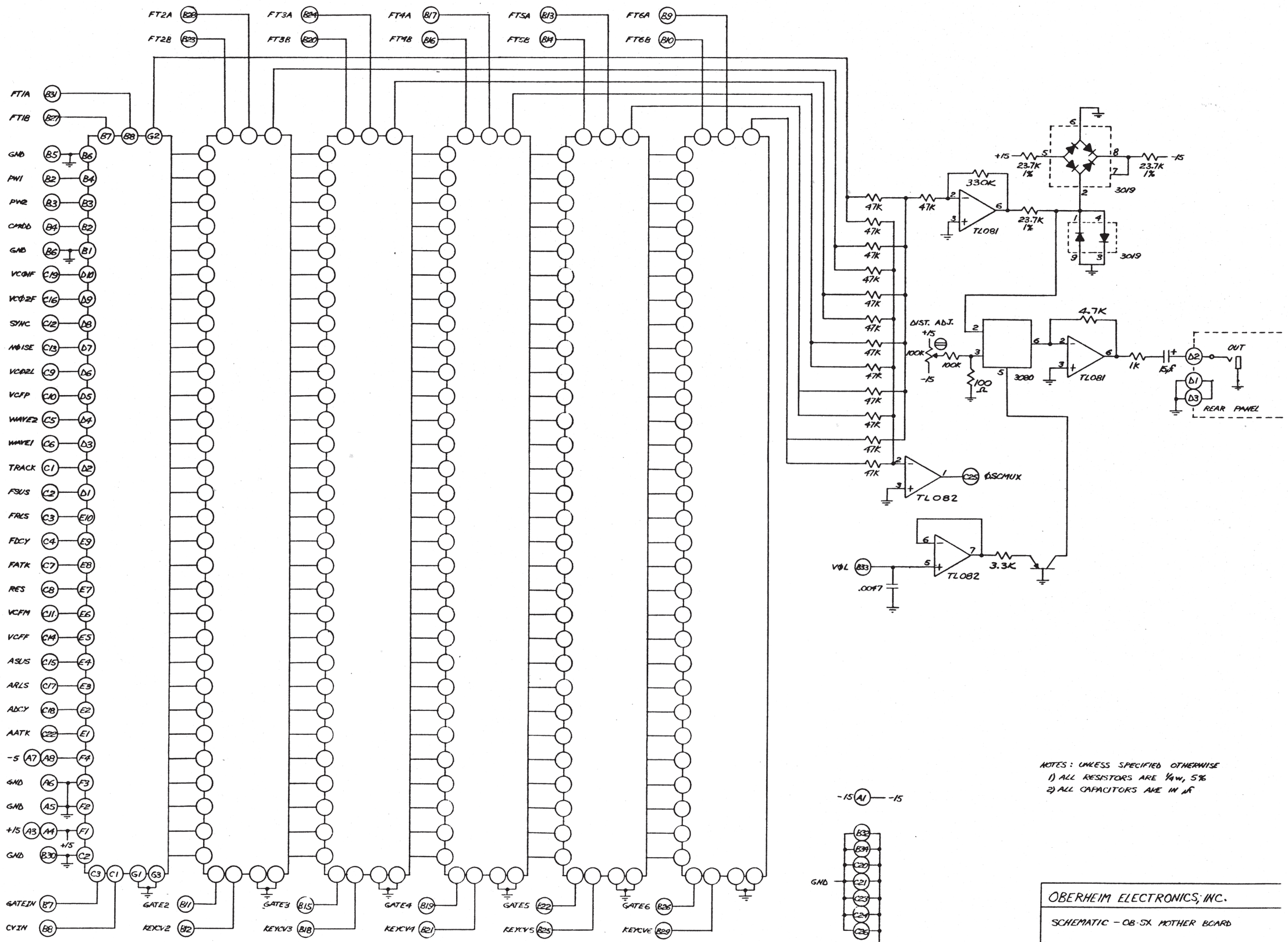

NOTES: UNLESS SPECIFIED OTHERWISE
1) ALL RESISTORS ARE ¼w, 5%
2) ALL CAPACITORS ARE IN μF

OBERHEIM ELECTRONICS, INC.

SCHEMATIC – OB-SX MOTHER BOARD

8-15-80

1466

OSC 1

OSC 2

AMPLIFIER ENVELOPE

VCA

FILTER

FILTER ENVELOPE

OBERHEIM ELECTRONICS, INC.

SCHEMATIC - 083X VOICE CARD

8 - 15 - 80

1460

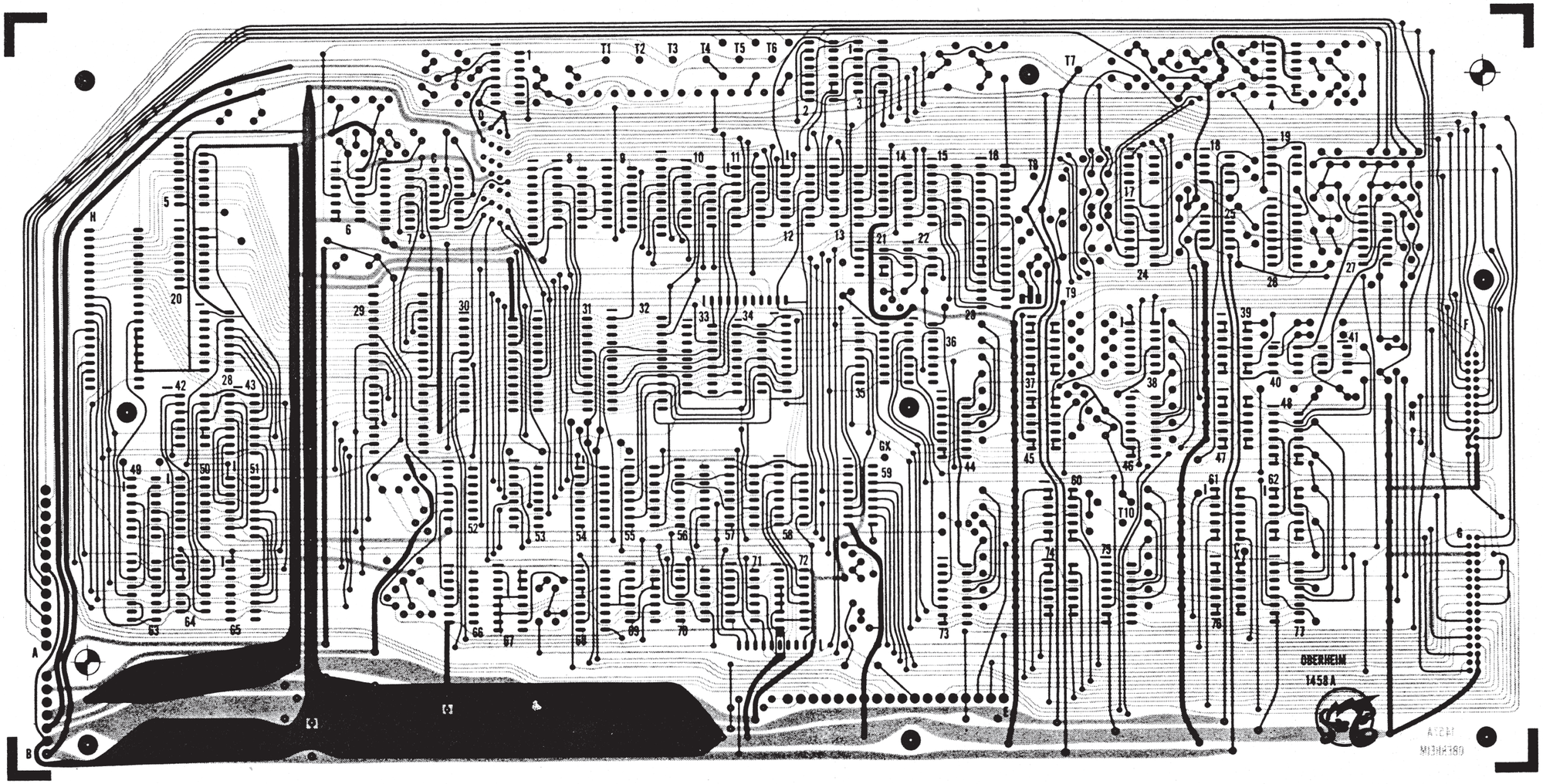

OBERHEIM ELECTRONICS, INC.		
SCALE:	APPROVED BY:	DRAWN BY
DATE.		REVISED
P.C. COMPOSITE – OB-SX CONT/PROC BOARD		
		DRAWING NUMBER

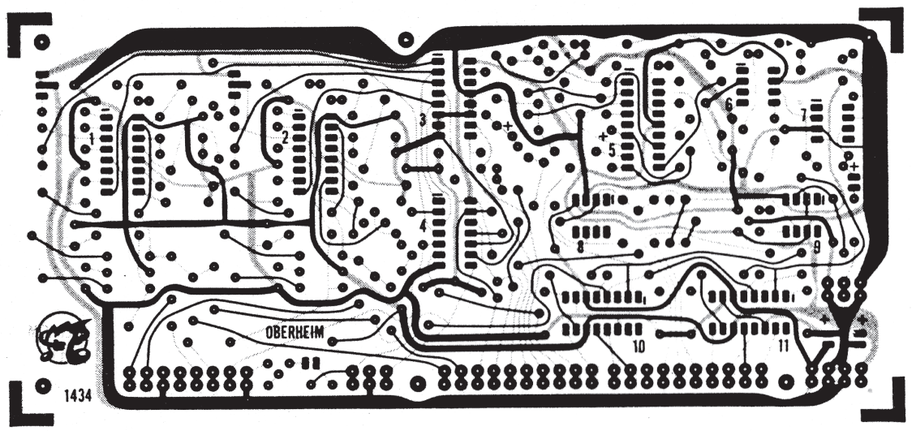

OBERHEIM ELECTRONICS, INC.		
SCALE:	APPROVED BY:	DRAWN BY
DATE:		REVISED
P.C. COMPOSITE – 08-SX VOICE CARD		
		DRAWING NUMBER

17X22 PRINTED ON NO. 1000H CLEARPRINT