SA09 SERVICE NOTES

SPECIFICATION

Keyboard	44 keys 3½-oct (F2-C6)
Footage	8, 4, 2, 1
Pitch	442Hz at A4
Tuning Range	±50 cents
Output Level	L: -30 dBm; M: -15 dBm; H: 0 dBm
Gate Out	Off: 0 V; ON: +14 V
Phones	Load: 8 ohms
Power Consumption	8 watts
Dimensions	676 (W) x 306 (D) x 102 (H) mm
Weight	6 kg

TOP COVER REMOVAL SCREWS:

(1) through (6) 3 x 10 mm Taptight head, Br

(7) through (9) 3 x 6 mm Self tapping binding head,Br (not shown)

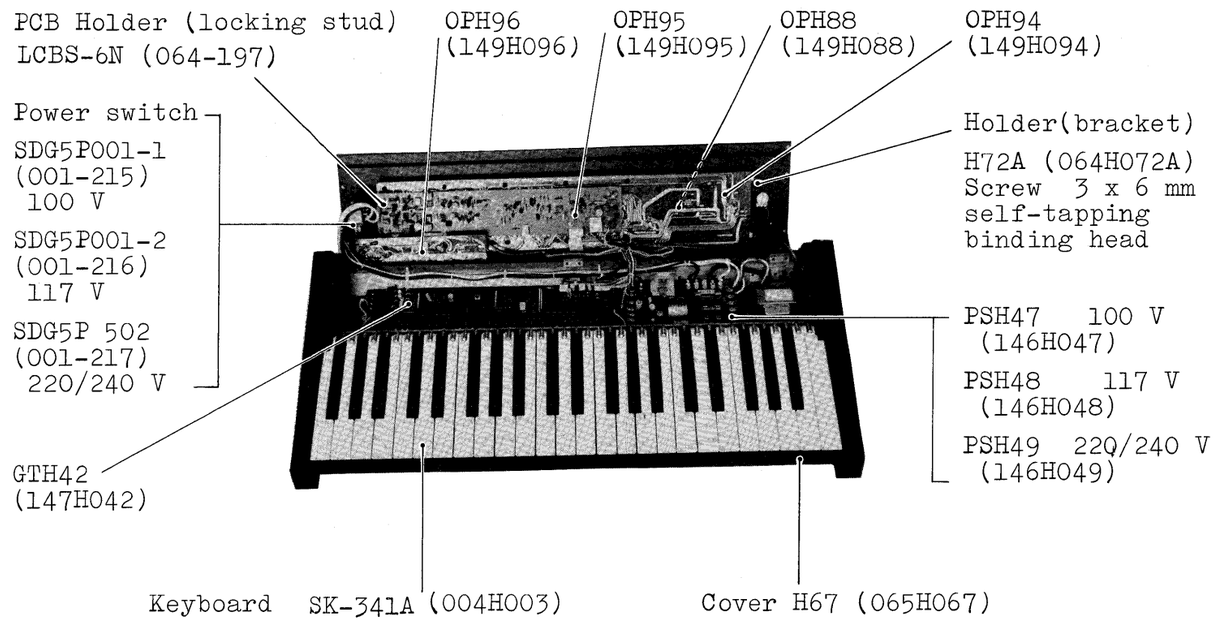

NOTE: When ordering, define PCB with suffix (A, B, etc.) as necessary.

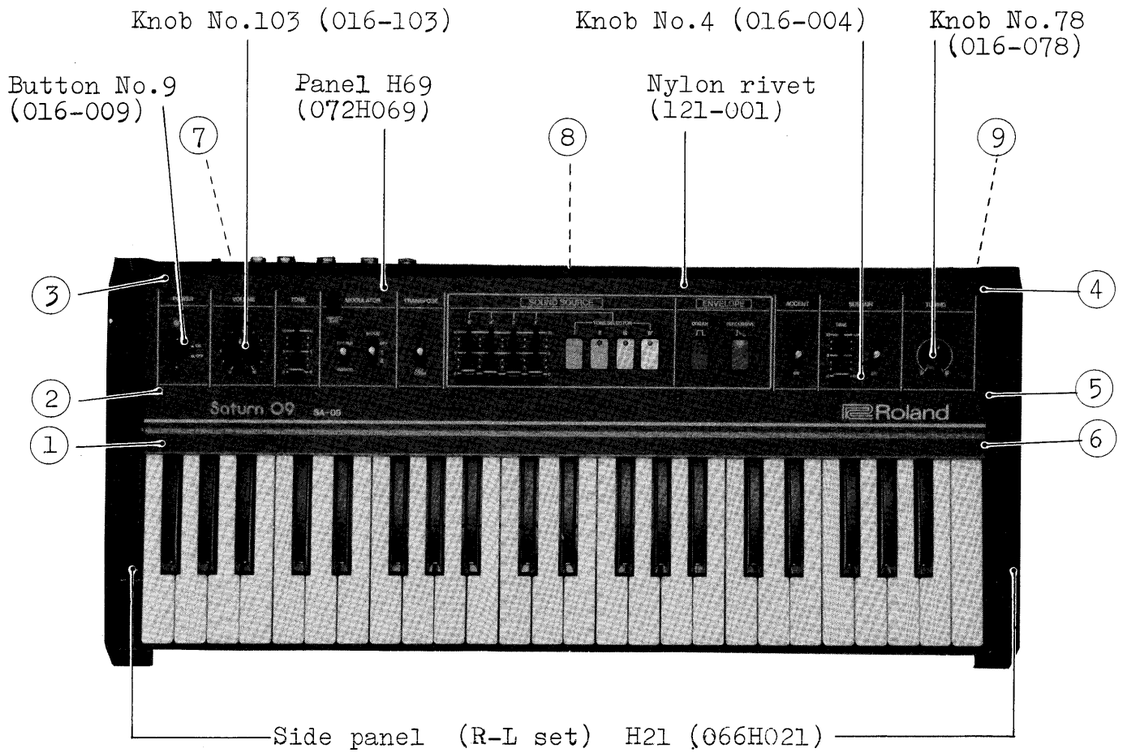

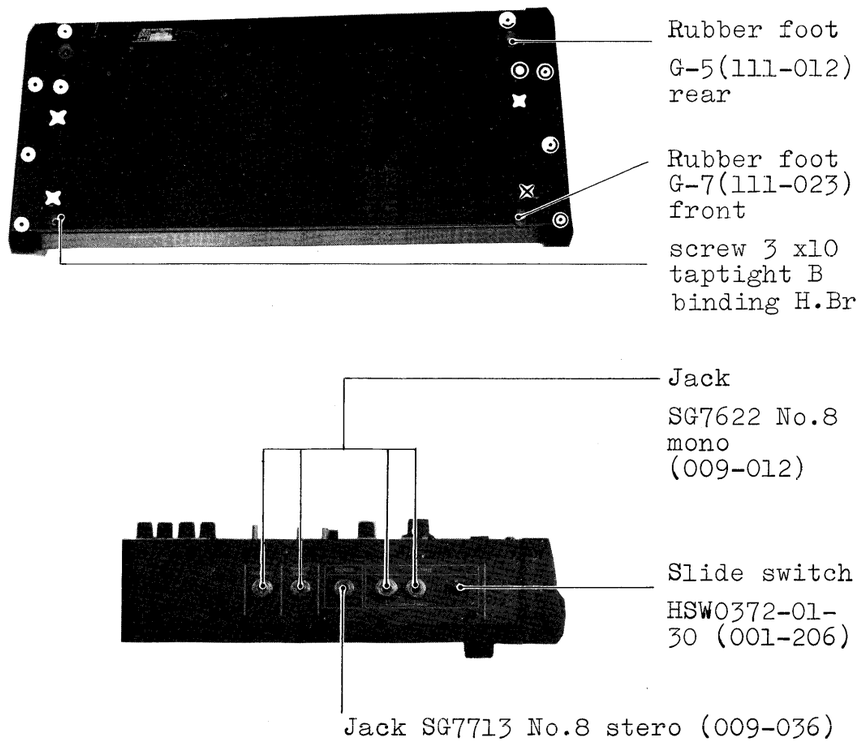

KEYBOARD PARTS

NO	PART NO	DESCRIPTION	NO	PART NO	DESCRIPTION
1	106H026	Natural key C, F	5	068H004	Guide bushing H4
1	106H027	Natural key D	6	101H141	Level felt H141
1	106H028	Natural key E, B	7	071H044	Contact leaf H44
1	106H029	Natural key G	8	071H047	Bus bar 44p H47
1	106H030	Natural key A	9	043H007	Switch unit 12p H7
1	106H031	Natural key C', F'	9	043H006	Switch unit 8p H6
2	106H032	Sharp key black	10	104H029	Busbar holder H29
3	070H029	Key spring H29	11	062H024	Chassis bracket H24
4	061H084	Chassis H84	12	098H006	Key stopper H6

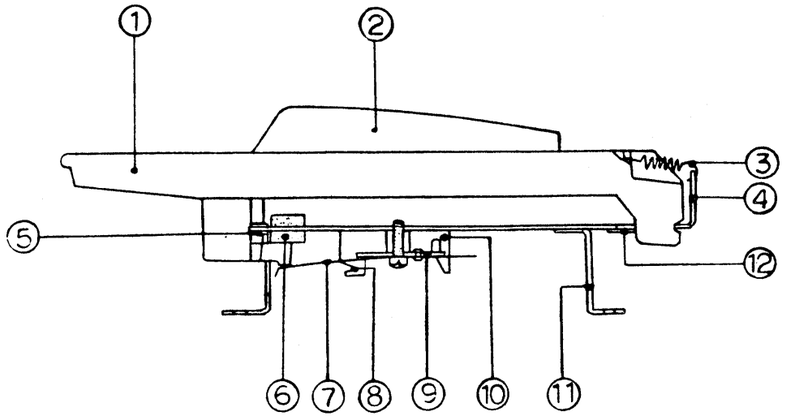

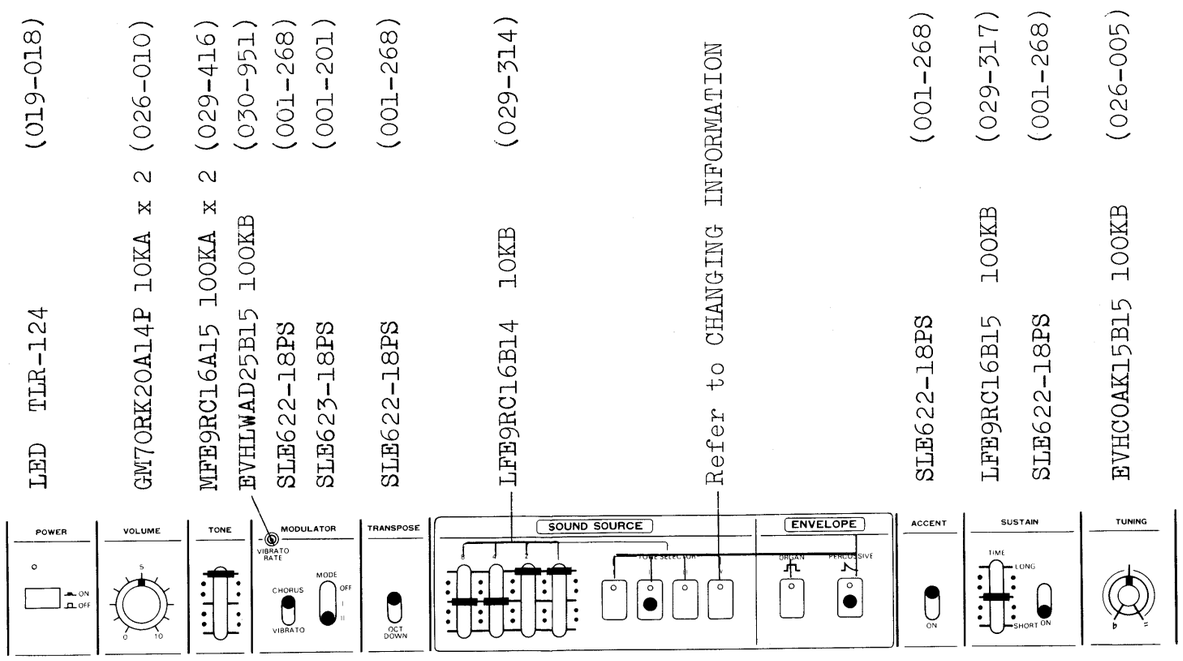

CHANGING COMPONENTS INFORMATION

TONE SELECTOR and ENVELOPE sections (subassembly, called out as OPH88) changed their switches and attendant tablets along with their mounting pc board with serial number 951800, called OPH88A.
Individual component cannot replace its predecessor because of differences in size and mounting holes. But, complete subassembly OPH88A is a direct replacement for the OPH88 and will come in place of particular part should it be out of stock.

PARTS LIST

	OPH88		OPH88A	
PCB less parts	052H228		052H228A	
SWITCH & TABLET	switch and tablet assembled		Switch KHC11901 P/N 13139712	
	P/N	Designation	Tblet P/N	Designation
White	001-315	320. 2 E1-1(W)	016H010	H10
Orange	001-317	320. 2 E1-1(O)	016H012	H12
Blue	001-320	320. 2 E1-1(B)	016H013	H13
Green	001-319	320. 2 E1-1(G)	016H014	H14
Yellow	001-316	320. 2 E1-1(Y)	016H017	H17
Red	001-318	320. 2 E1-1(R)	016H018	H18

CHANGINS on R and C (indicated with * on CKT DIA)

Number	S/N up to	Value	S/N with	Value
R127	910499	100K	910500	330K
R211, R212,R213	920699	100	920700	470
C48	920699	.001μ	920700	jumper wired
R94	920699	49K	920700	obsolete
R126	920699	1M	920700	2.2M
C61	920699	.0022μ	920700	.022μ
R8	920699	1M	920700	3.3M

TONE FILTER

Output signals of a foot are grouped and fed into filter set consisting of four band-pass filters --- HPF, LPF.
Analog switches IC1, according to ON or OFF signal from R-S flip-flop IC3, close or open to selectively mute the audio spectrums. The tailored overall tone characteristics sounds tonal determined by TONE SELECTOR setting.

An example of logic table (TONE I)

IC2	L	H	L/H	H/L
Pin	3	4	11	10
IC4	L		H	
Pin	3		4	
IC3	H	L	L	L
Pin	10	11	4	3

H: 0V
L: -15V

C45 and C46 provide a means for initialization for TONE SELECT system. When power is firstly on, TONE I will be selected.

ENVELOPE SELECTOR

Pins 8-13 of IC4 on OPH94 and Q22-25 on OPH95 deliver different control voltages to ENVELOPE GENERATOR on GTH42 according to the selection on ENVELOPE;PERCUSSIVE or ORGAN as shown in the table right.
C47 applies initial trigger to pin 13 of IC4, causing it to set ORGAN status.

	IC4 pin 10	Q22, Q24-25	Q23E PEAK VOLTAGE	Q22C BIAS
ORGAN	H (0V)	off	-13.5V	-13.5V
PERCUSSIVE	L (-15V)	on	-17.5V	-20V

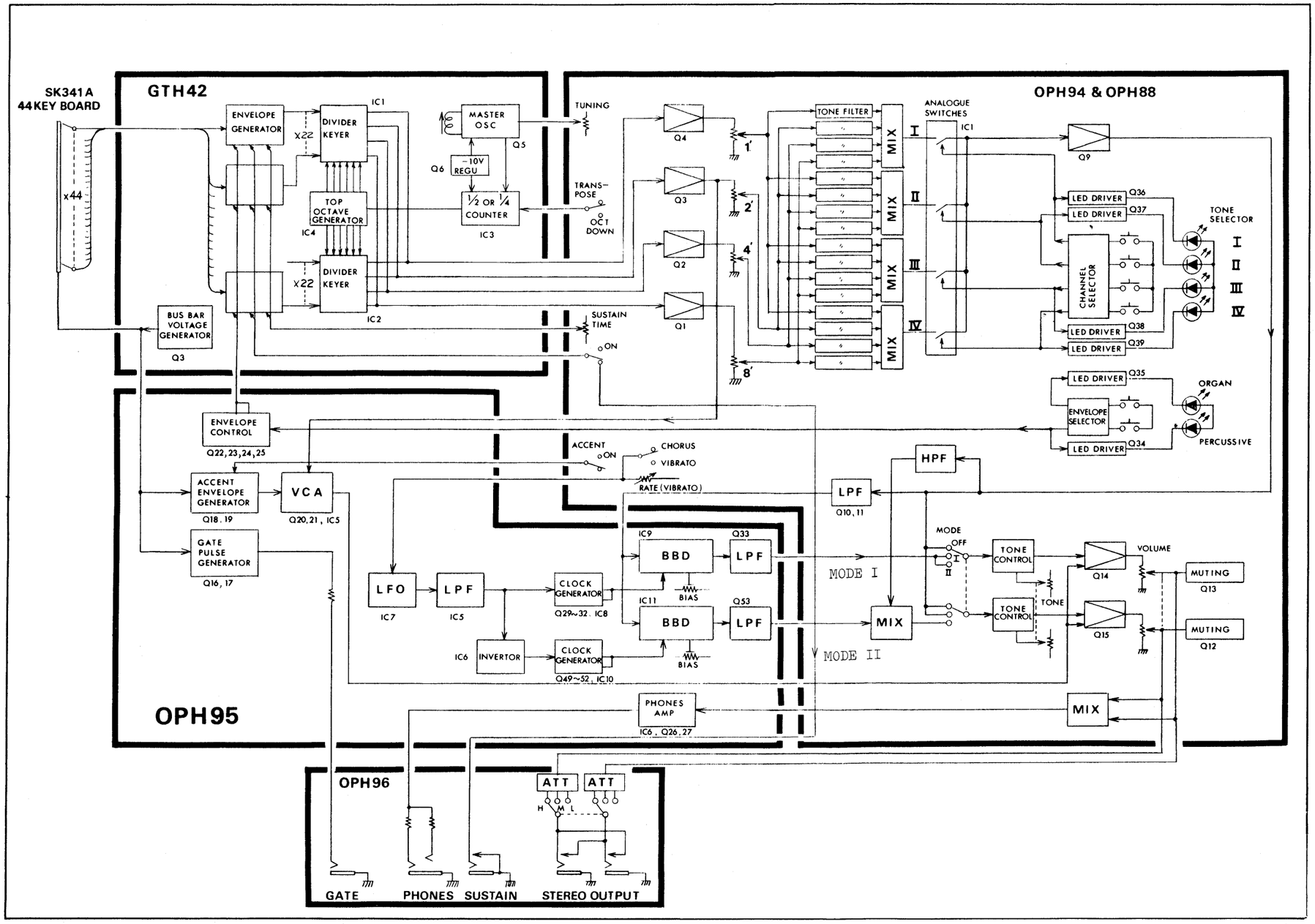

OUTPUT SIGNALS DISTRIBUTION

Output signals from MODULATOR I and II are routed to output jacks to make combination with direct signal as shown below.

		J3 MONO	J4 STEREO
MODE	OFF	direct	direct
	I	MODU. I (IC9)	direct
	II	MODU. I (IC9)	MODU.II (IC11)

When only one jack is engaged, signal at the other jack will be mixed and the combined signals are sent out from one jack.

ACCENT

When ACCENT is ON, VCA Q20-21, IC5 amplifies 2-foot. The output waveform is analogous to the envelope fed from ACCENT ENVELOPE GENERATOR Q18, Q19 which triggered by the negative going voltage from Q3 on GTH42 as a keyboard contacts close while all other keyboard switches are released.

MUTING

Q12 and Q13 on OPH94 reduce a thump which should occur when power supply is turned on. Surge current flowing through C49 developes across R98 a potential enough to forward bias Q12 before C49 charges. Q12 and Q13, during their conductions shut the signals to ground.

GTH42 (147H042) (PCB 052H221)

PSH49

220V/240V

220V —— ; BRN
240V ----- ; RED

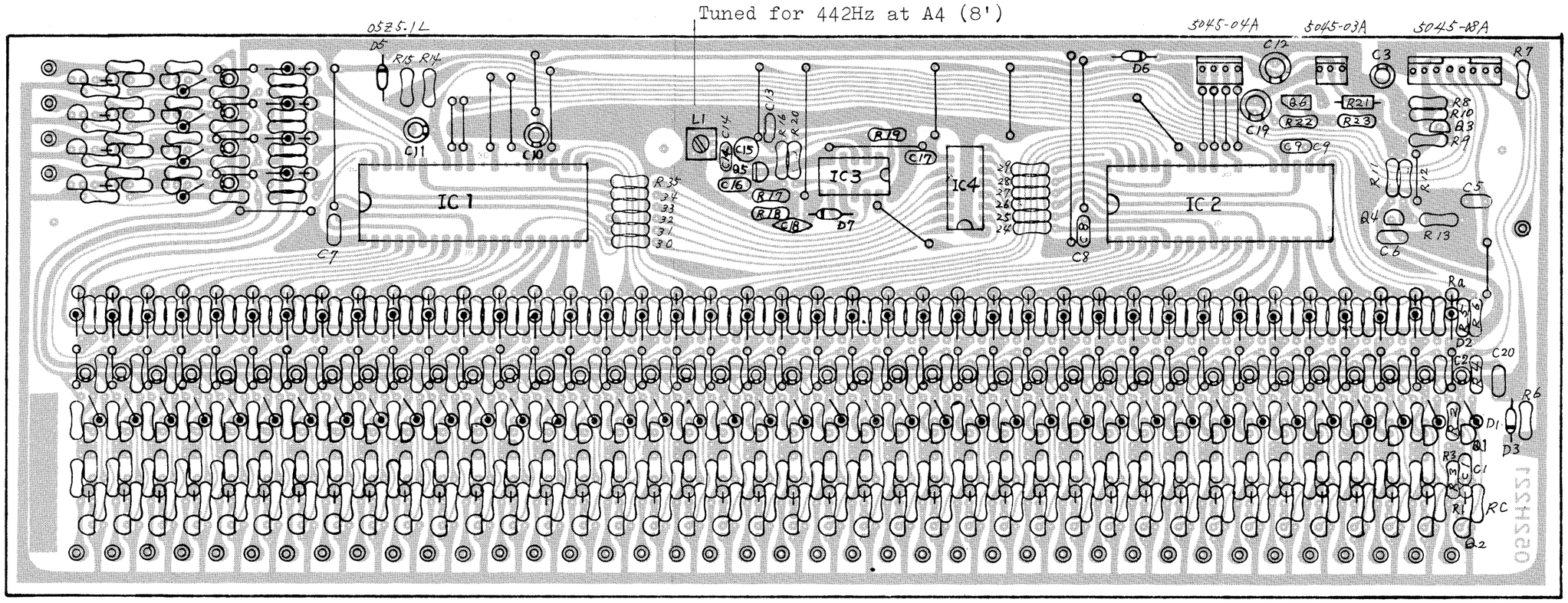

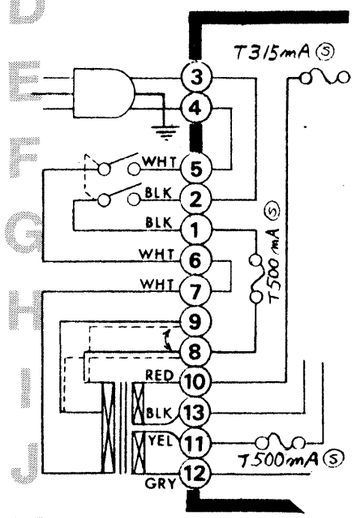

PSH48 117V

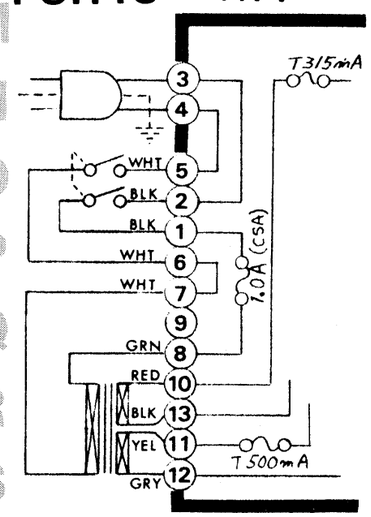

PSH47A (146H047A), PSH48A (146H048A), PSH49A (146H049A) (PCB 052H220A)

100V PSH47

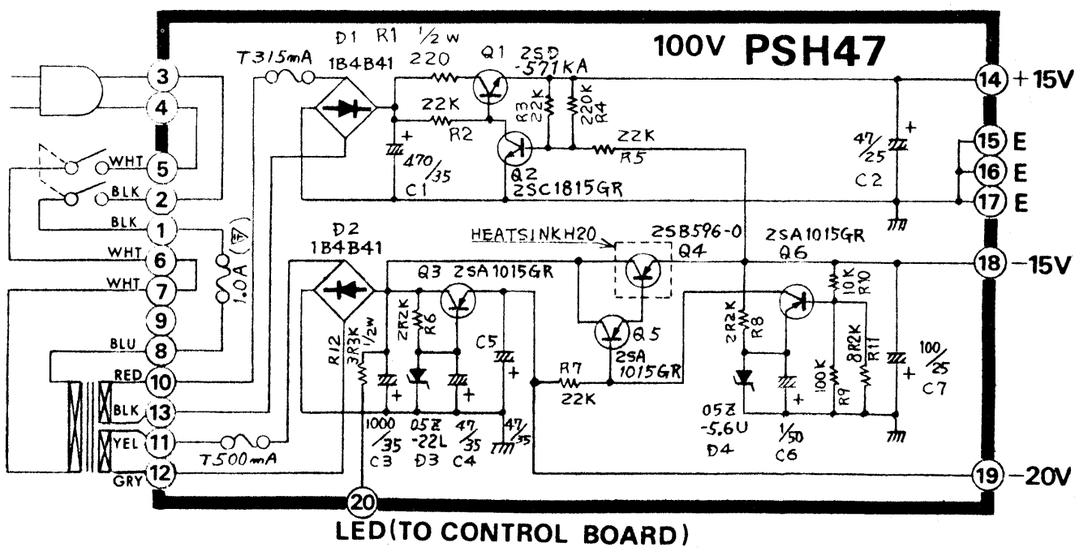

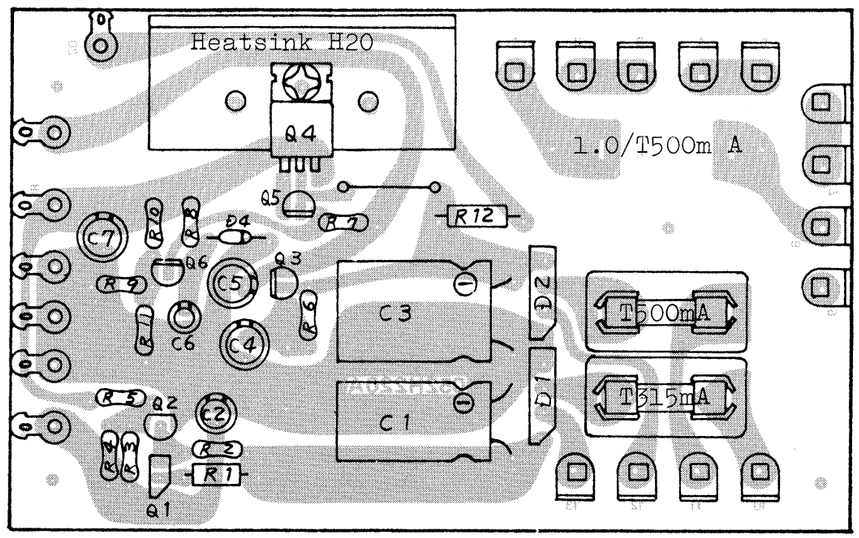

MASTER OSCILLATOR L1, Q5

Colpitts-type oscillator. The frequency is controllable with TUNING within the range of ±50 cents.

1/2 or 1/4 COUNTER IC3

Serves as a frequency divider. When TRANSPOSE is in "off", the signal coming from the Master Oscillator is divided into 1/2. When in "on", into 1/4.

TOP OCTAVE GENERATOR IC4

Provides equally tempered scale of 12 Top Octave Tones.

DIVIDER KEYERS IC1, IC2

Each incorporates 22 key inputs, 88 dc keyers, 34 binary dividers. Provides sum of 44 notes of four octaves (176 notes). When any one of the 44 keys is played, the envelope generator corresponding to the key generates a signal of particular envelope to be sent to the Divider-keyer through its key input terminal. As a result, four outputs of the divider-keyer are to have the signals of 8, 4,2 and 1 foot corresponding to the key played and to the envelope generated.

ENVELOPE GENERATOR (GATE, in the circuit diagram) (See fig. below.)

Forty-four circuits for all keyboard switches. The paths through which C2 charges or discharges are different to each other.

CHARGING PATH. Varies current-flow period according to the mode setting: ORGAN or PERCUSSIVE. With ORGAN selected, C2 is charged with current flowing via Q1 as long as the key switch is closed. With PERCUSSIVE mode, C2 can be charged only short time before C1 charges sufficiently.

DISCHARGING PATH. The same route for both modes but different with SUSTAIN on/off settings. C2 starts discharge through R1 and R2 relatively fast to the voltage set by SUSTAIN TIME at which D2 cuts off and C2 continues discharge through only R1 at a slower rate.

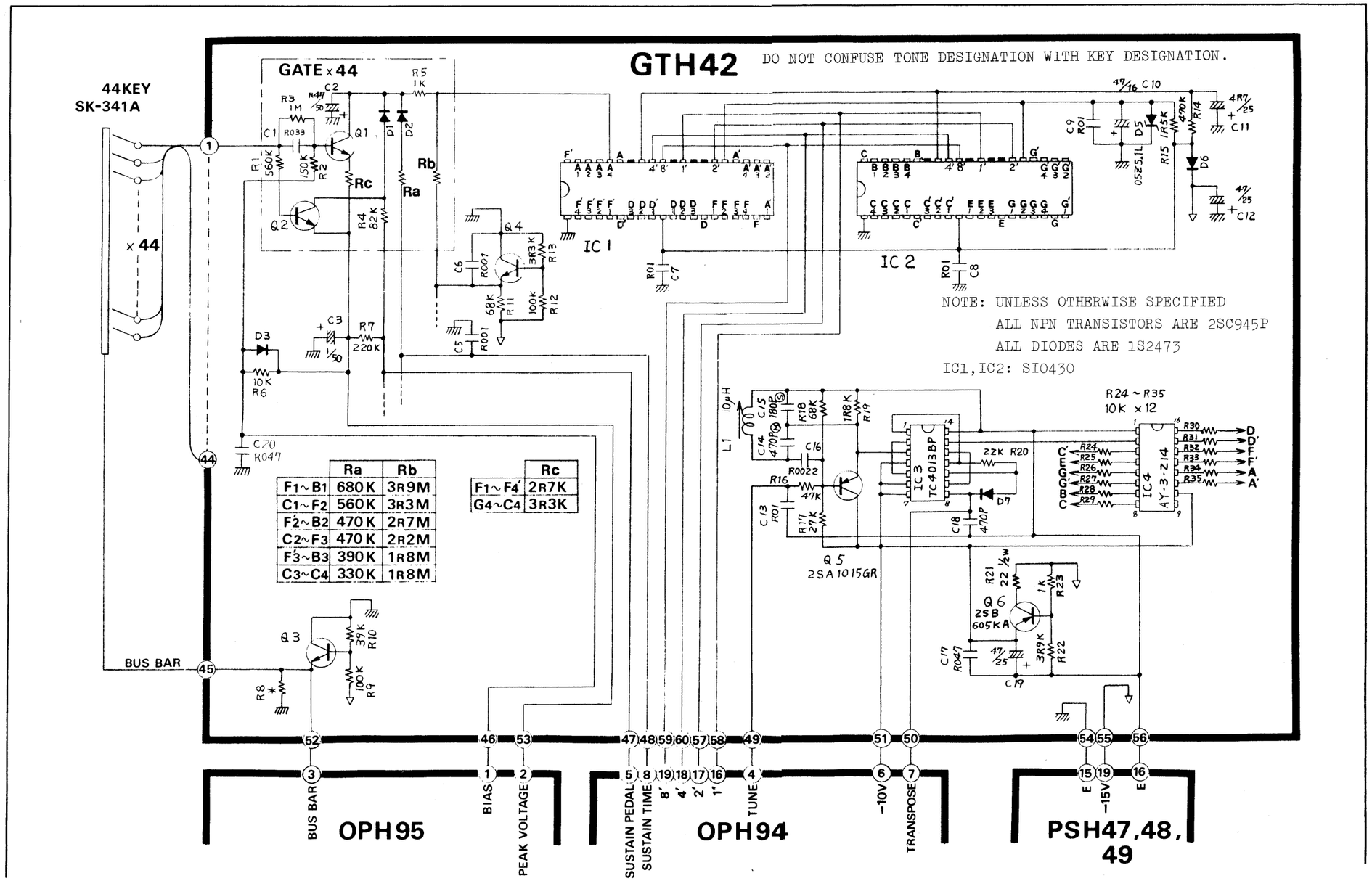

	Ra	Rb
F1~B1	680K	3R9M
C1~F2	560K	3R3M
F2~B2	470K	2R7M
C2~F3	470K	2R2M
F3~B3	390K	1R8M
C3~C4	330K	1R8M

	Rc
F1~F4'	2R7K
G4~C4	3R3K

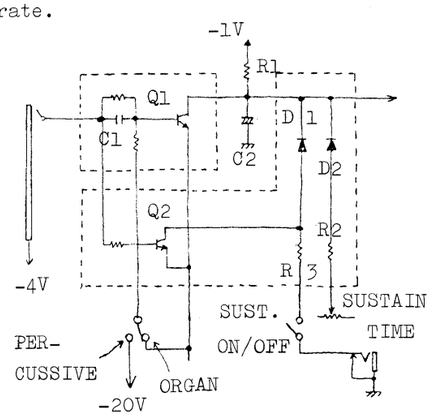

ENVELOPE GENERATOR

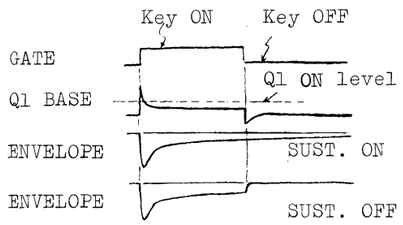

PERCUSSIVE MODE

Releasing a key during SUSTAIN OFF causes C2 to discharge rapidly via low resistance R3.

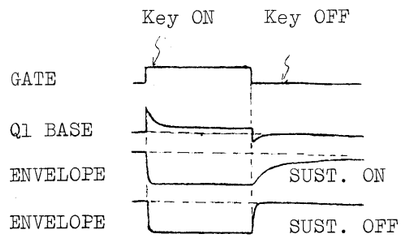

ORGAN MODE

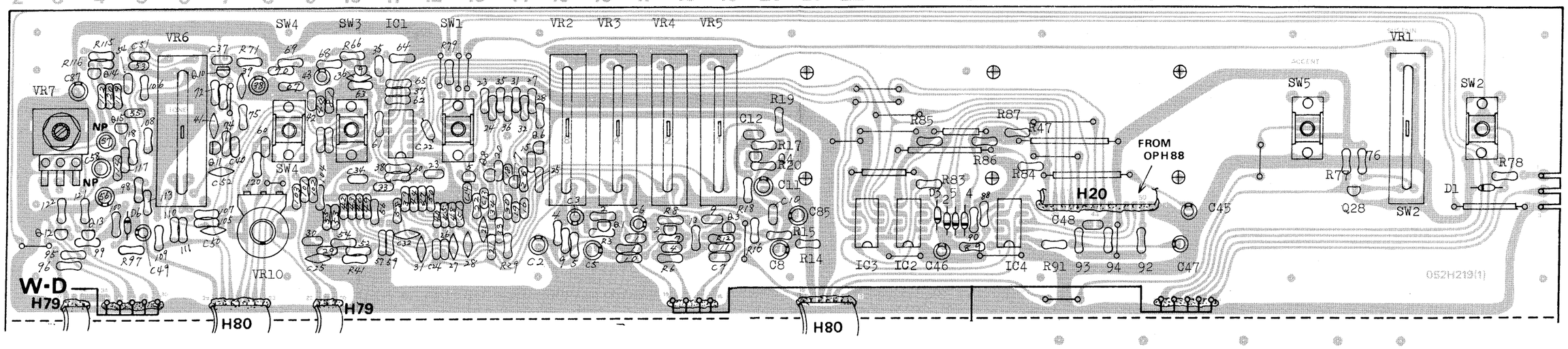

OPH94 (149H094) (PCB 052H219 (1)) View from foil side
OPH95 (149H095) (PCB 052H219 (2))

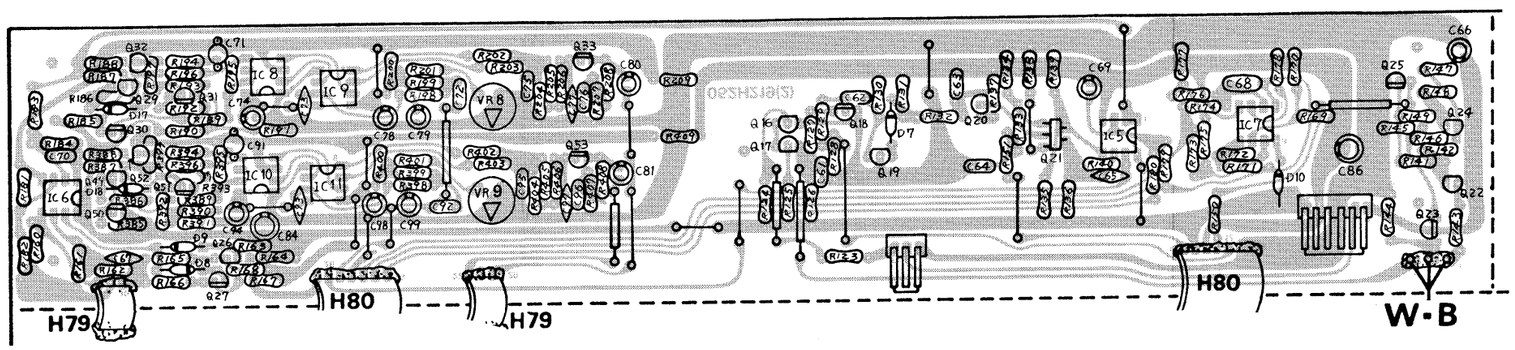

OPH88A (149H088A)
(PCB 052H228A)
View from foil side

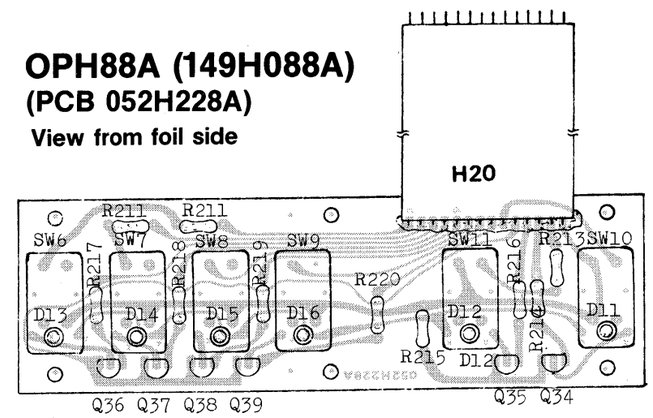

OPH96 (149H096) (PCB 052H219 (3))
View from foil side

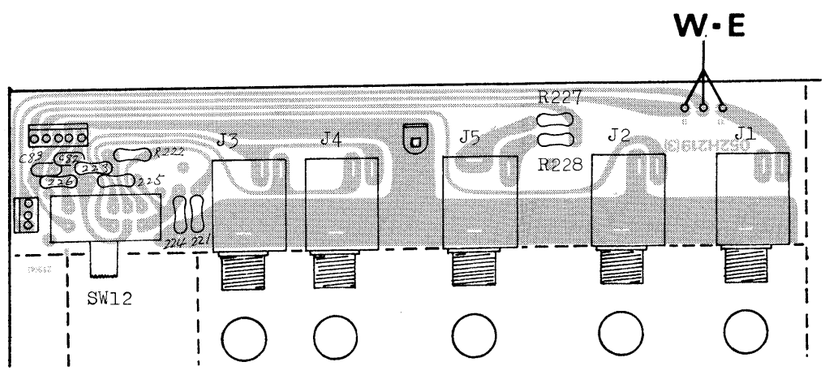

ADJUSTING BBD BIAS
(OPH95)

Set panel controls: SOUND SOURCE -- all footage knobs at high position.

Connect an oscilloscope to TP-1 (TP-2) or Q33 (Q53) emitter.

While pressing ten keys around the center of keyboard, adjust VR-8 (VR-9) on OPH95 for centered waveform on the screen.

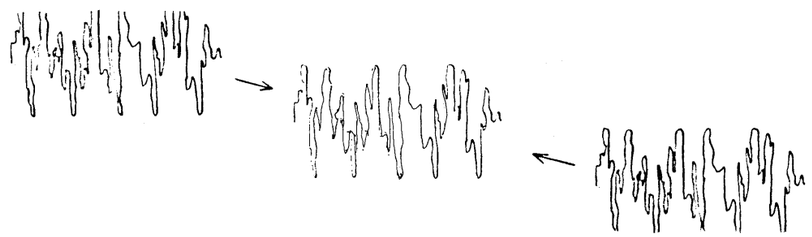

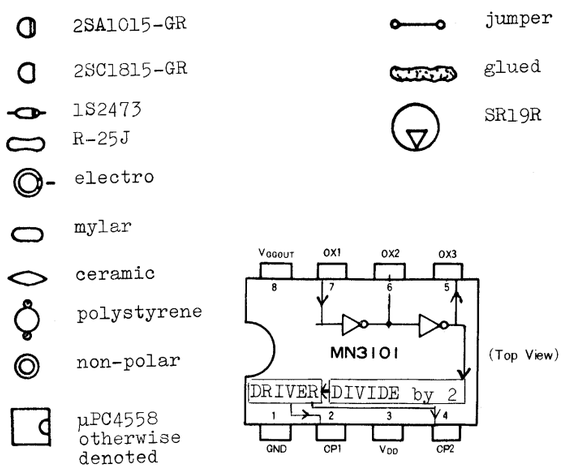

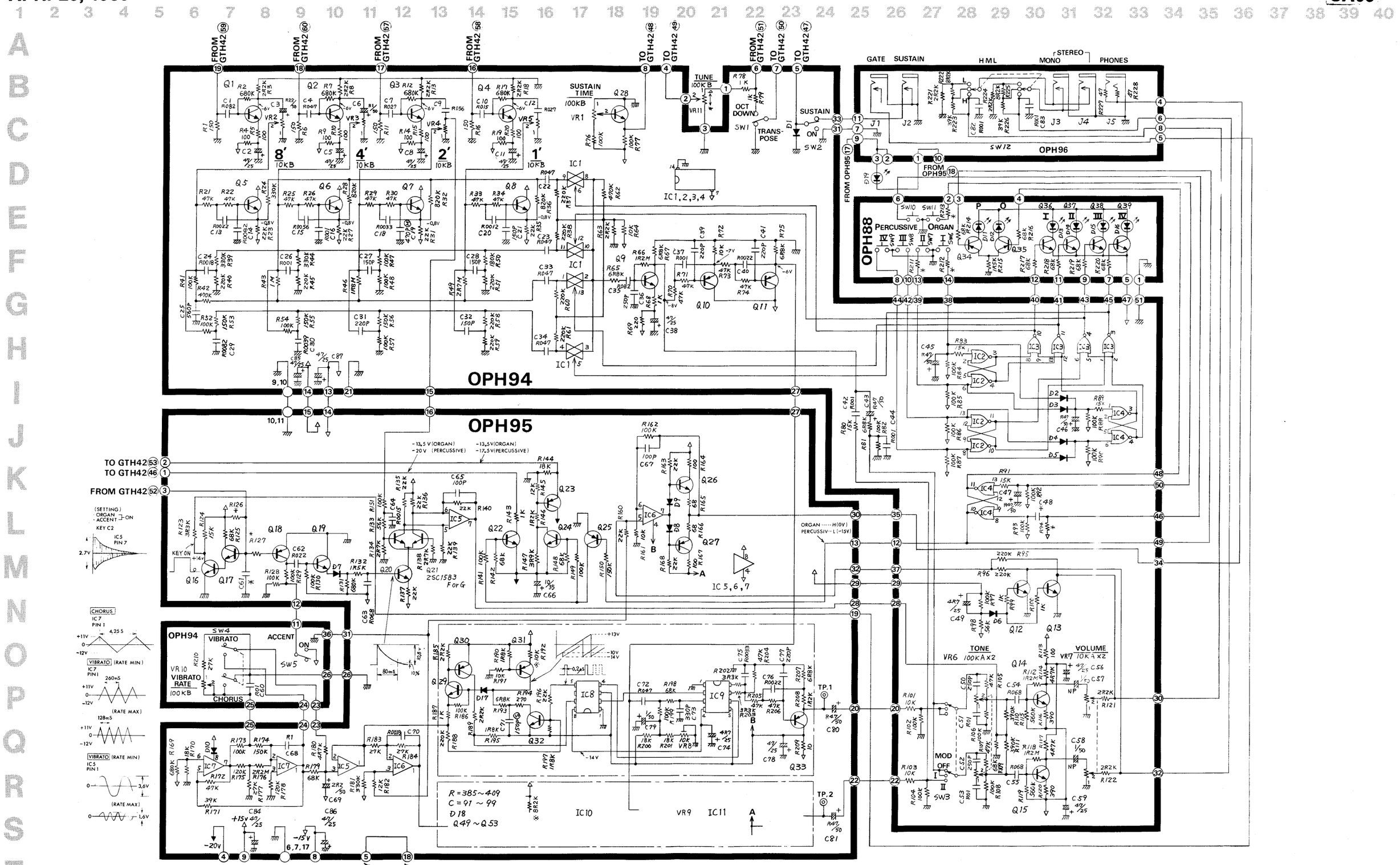

NOTE; 1.UNLESS OTHERWISE SPECIFIED
ALL PNP TRANSISTORS ARE 2SA1015(GR)
ALL NPN TRANSISTORS ARE 2SC1815(GR)
ALL DIODES ARE 1S2473
ALL LEDS ARE TLR124(RED)
2.HIGHEST REF DES
R499,C99,D19,Q53,IC11,VR11,SW12,J5

IC1;TC4016BP
IC2,IC3,IC4;TC4001BP
IC5,IC6,IC7;μPC4558C
IC8,IC10;MN3101
IC9,IC11;MN3009

PARTS LIST

PCB ASSEMBLY

147H042	GTH42	(pcb 052H221)
149H094	OPH94	(pcb 052H219-1)
149H095	OPH95	(pcb 052H219-2)
149H096	OPH96	(pcb 052H219-3)
	LED holder (pcb 052H219-4)	
146H047A	PSH47A	(pcb 052H220A) 100V
146H048A	PSH48A	(pcb 052H220A) 117V
146H049A	PSH49A	(pcb 052H220A)220/240V
149H088A	OPH88A	(pcb 052H228A)
	can replace OPH88	

SEMICONDUCTOR

Transistor

017-155	2SA1015-GR	
017-106	2SC1815-GR	
017-161	2SC1583 -F or -G	dual
017-023	2SC945-P	
017-163	2SB605-KA	
017-164	2SD571-KA	
017-160	2SB596-O	

Diode

018-014	1S2473	
018-094	1S2473 FV	vertical mount
018-118	05Z-5.1L	zener
018-119	05Z-22L	zener
018-035	05Z-5.6U	zener
018-089	1B4B41	stack
019-028	TLR124	LED

IC

020-097	μPC4558	
020-224	MN3101	BBD driver
020-215	MN3009	BBD
020-051	TC4001BP	
020-083	TC4016BP	
020-191	S10430	Divider keyer
020-156	AY-3-0314	Chromatic divider
020-014	TC4013BP	

072H069	Panel	H69	top
066H021	Side panel	H21	R, L set
061H075	Chassis	H75	
111-021	Rubber foot	G-5	rear
111-023	Rubber foot	G-7	front
004H003	Keyboard	SK341-A	
065H067	Cover	H67	front rail

KNOB

016-009	Button	no.9 blk	power
016-103	Knob	no.103	VOL.
016-078	Knob	no.78	TUN.
016H004	Knob	H4	slider

* Tablets, Tablet Switches : see page 2.

SWITCH

001-215	SDG 5P 001-1	100V	power
001-216	SDG 5P 001-2	117V	power
001-217	SDG 5P 502	220/240V	power
001-268	SLE-622-18PS		lever
001-201	SLE-623-18PS		lever
001-206	HSW-372-01-030		slide

TRANSFORMER, COIL

022H021J	PT H21J	100V	power
022H021C-B	PT H21C-B	117V	power
022H021D-A	PT H21D-A	220/240V	power
022-135	Coil 40M-067-018	10μH	osc

JACK

009-012	SG7622	no.8	mono
009-036	SG7713	no.8	stereo

FUSE

008-041	MGP 0001 CSA 1A prim. 117V
008-063	SEMKO T500mA sec.(also prim.220/240V)
008-061	SEMKO T315mA sec.

POTENTIOMETER

026-010	GM70RK20A14P	10KA x 2	VOL.
026-005	EVHCOAK15B15	100KB	TUNE
030-951	EVHLWAD25B15	100KB	RATE
029-314	LFE9RC16B14	10KB	slide
029-317	LFE9RC16B15	100KB	slide
029-416	MFE9RC16A15	100KA x 2	slide TONE
030-465	SR19R	10KB	trimmer

CAPACITOR

035-274	ECQS1151KX	150pF 125V	polystyrene
035-093	ECQS1181JZ	180pF 125V	polystyrene
032-275	ECEA50MR47	0.47μF 50V	electro. M type
032-190	ECEA50N1	1μF 50V	bi-polar
032-295	ECEA50MR10	0.1μF 50V	electro. M type
032-296	ECEA50MR22	0.22μF 50V	electro. M type

MISCELLANEOUS

064H076	Holder H76	LED
064H073	Holder H73	chassis-top panel
064H087	Holder H87	keyboard
064-197	Holder LCBS-6N	PCB
053H020	Flat cable	H20
052H079	Flat cable	H79
052H080	Flat cable	H80
052H031	Flat cable	H31
121-001	Nylon rivet	
065H066	Cover H66	slide pot. slide sw.
120-001	Sleeve nut no.1	3 x 10mm
120-014	Sleeve nut no.14	3 x 6mm
048H020	Heat sink H20	
012-003	Fuse holder TF758	or F-6