BELANGRIJK:
houd deze schema's bij het orgel! !
IMPORTANT:
keep the schematic diagrams with the organ! !
WICHTIG:
Schaltpläne bei Orgel aufbewahren! !

SERVICE INFORMATION

0478

solina

STRING ENSEMBLE

INHOUD – CONTENTS – INHALT	Part No. *	Sheet No.
Gate circuit	021.0001	015.0260
Bass circuit	003.3025	015.0260
Supplementary circuit	003.2182	015.0260
Register circuit	003.3016	015.0260
Divider circuit A	005.0129	
Divider circuit B	005.0130	
Master oscillator circuit	005.0136	
Schematic diagram		015.0260
Wiring diagram		015.0213
Signal flow diagram		015.0267
Control circuit	012.0025	
Modulator circuit B	012.0034	
Divider circuit C	005.0131	
Power supply	008.0066	

* Printed circuit Part number

TECHNISCHE GEGEVENS	TECHNICAL DATA	TECHNISCHE DATEN	
Netfrequentie	Mains frequency	Netzfrequenz	50/60 Hz
Netspanning*	Mains voltage*	Netzspannung*	220 V (115-240-250*)
Ingang (input):	**Input connection:**	**Eingang (input):**	
Expressionpedal	Expressionpedal	Schwellpedal	
Output:	**Output:**	**Ausgangsabnahme:**	
Low output I	Low output I	Low output I	+ 1,5 V tt - imp: 3 kOhm
High output II	High output II	High output II	+ 5 V tt - imp: 5 kOhm
Zekeringen:	**Fuses:**	**Sicherungen:**	
net: 220 V*	mains: 220 V*	Netz: 220 V*	thermal release in primary winding (micro STB 4239 disconnect temp. 115 C)
18,5 V: 2x3,15 AT	18,5 V: 2x3,15 A (slow)	18,5 V: 2x3,15 A (träge)	

* 115 - 240 - 250 V.

* Voor 115, 240 en 250 Volt netspanning; als volgt te werk gaan:
– verwijder kap van de transformator
– de draad op de 220 V aansluiting omzetten naar de gewenste netspanning

* For 115,240 and 250 Volt operation:
– remove cover of transformer
– relocate mains voltage to appropriate voltage.

*Für 115, 240 und 250 V Netzspannung wie folgt handeln:
– Die Kappe des Transformators entfernen
– Den Draht des 220 V Anschlusses in die gewünschte Netzspannung umsetzen.

Service dokumentatie: Service onderdelenlijst zie:
Service information: Service parts list see:
Kundendienst dokumentation: Service-Erzatzteilenliste siehe:
(aanvragen bij servicedienst te Bodegraven)
inquire by your importer or MCH Holland)
(fragen Sie bei Ihrem Importeur oder MCH)

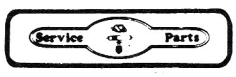

Wijzigingen voorbehouden
Alterations reserved
Anderungen vorbehalten
Changements reserver

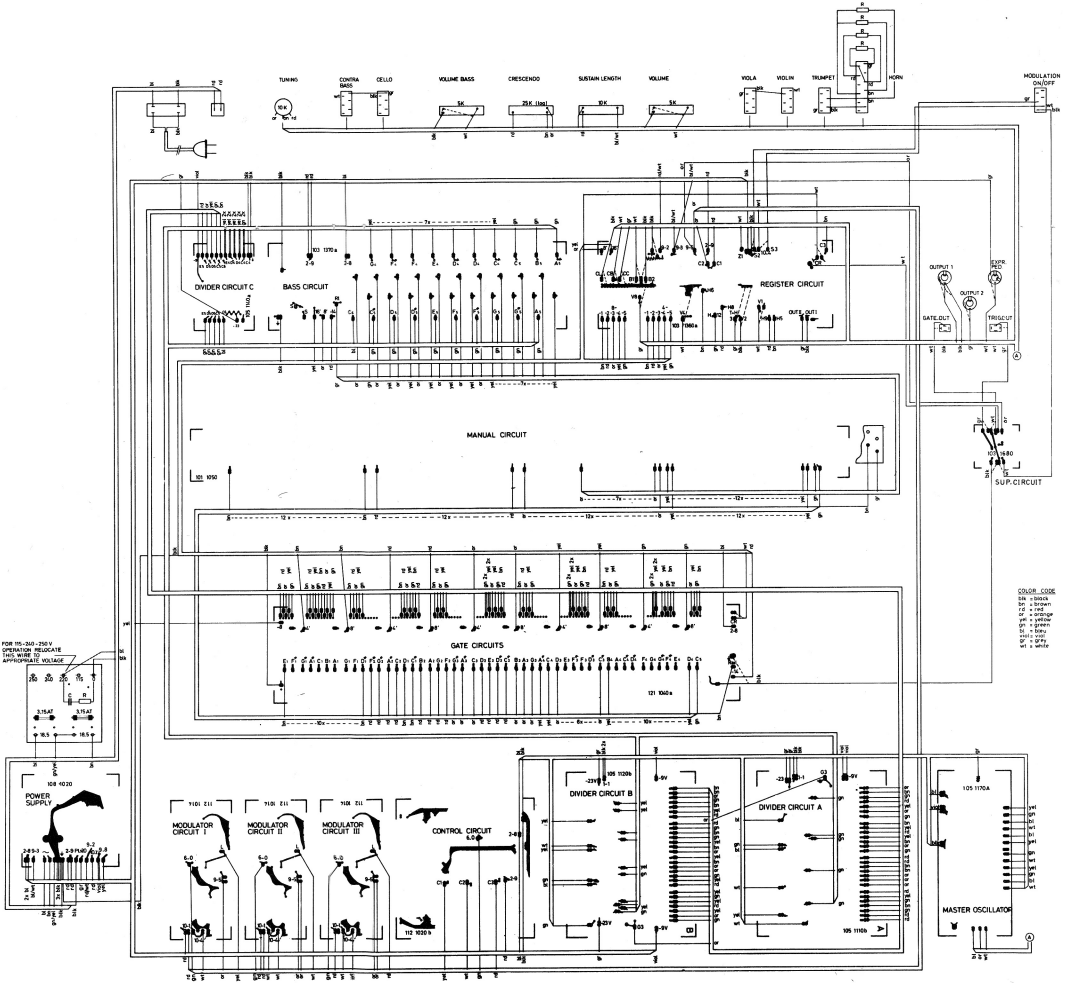

WIRING DIAGRAM

SHEET NO: 015 0213 B

STRING ENSEMBLE

PAT. APPLIED FOR

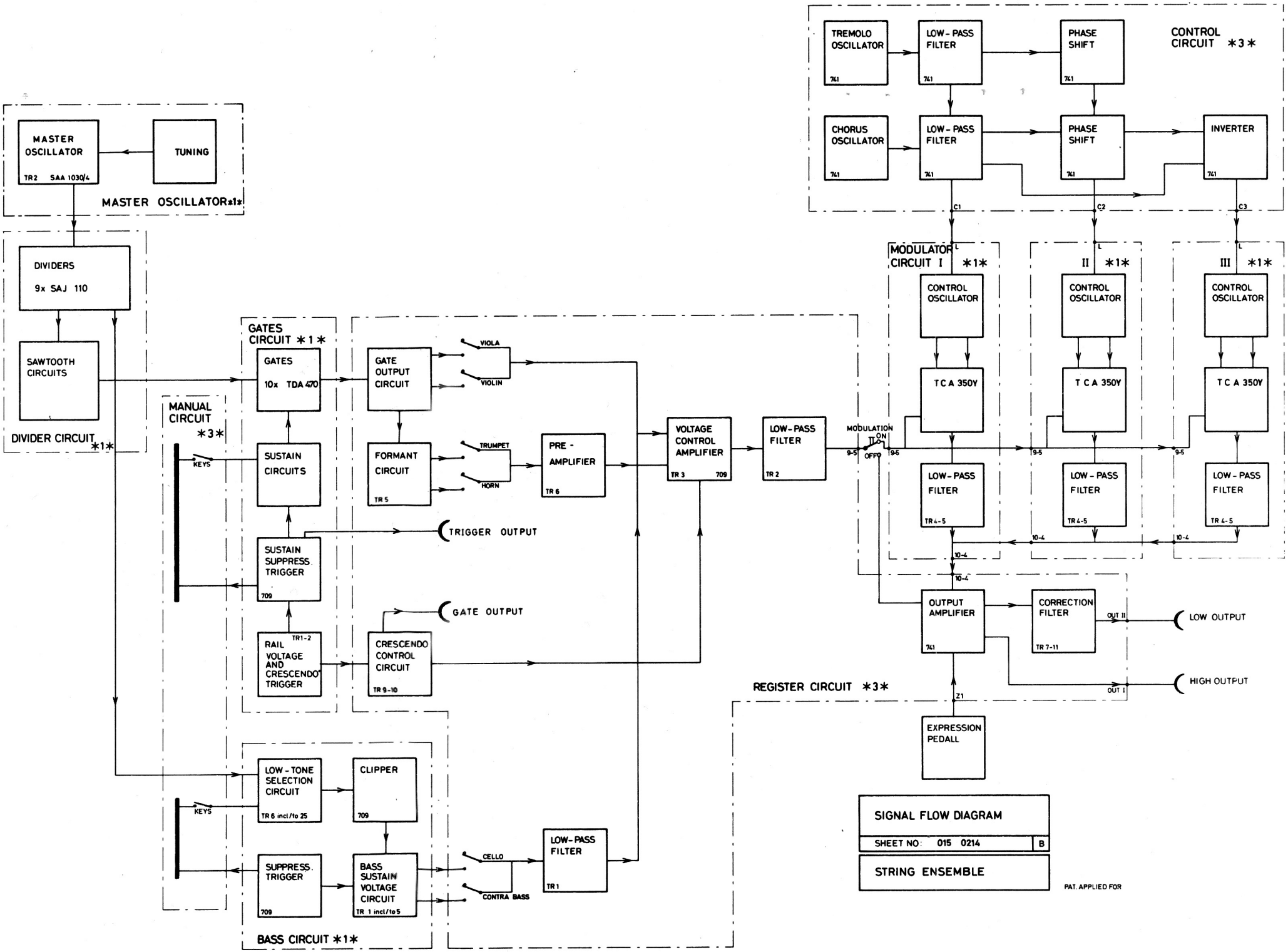
MASTER OSCILLATOR
TR2 SAA 1030/4
TUNING
MASTER OSCILLATOR *1*
DIVIDERS
9x SAJ 110
SAWTOOTH CIRCUITS
DIVIDER CIRCUIT *1*
GATES CIRCUIT *1*
GATES
10x TDA 470
MANUAL CIRCUIT *3*
KEYS
SUSTAIN CIRCUITS
SUSTAIN SUPPRESS. TRIGGER
709
RAIL VOLTAGE AND CRESCENDO TRIGGER
TR1-2
GATE OUTPUT CIRCUIT
VIOLA
VIOLIN
FORMANT CIRCUIT
TR 5
TRUMPET
HORN
PRE - AMPLIFIER
TR 6
TRIGGER OUTPUT
GATE OUTPUT
CRESCENDO CONTROL CIRCUIT
TR 9-10
VOLTAGE CONTROL AMPLIFIER
TR 3
709
LOW-PASS FILTER
TR 2
MODULATION
ON
OFF
9-5
10-4
TREMOLO OSCILLATOR
741
LOW-PASS FILTER
PHASE SHIFT
CHORUS OSCILLATOR
INVERTER
CONTROL CIRCUIT *3*
C1
C2
C3
MODULATOR CIRCUIT I *1*
II *1*
III *1*
CONTROL OSCILLATOR
TCA 350Y
TR 4-5
OUTPUT AMPLIFIER
CORRECTION FILTER
TR 7-11
OUT II
OUT I
LOW OUTPUT
HIGH OUTPUT
REGISTER CIRCUIT *3*
Z1
EXPRESSION PEDALL
LOW-TONE SELECTION CIRCUIT
TR 6 incl/to 25
CLIPPER
SUPPRESS. TRIGGER
BASS SUSTAIN VOLTAGE CIRCUIT
TR 1 incl/to 5
CELLO
CONTRA BASS
LOW-PASS FILTER
TR 1
BASS CIRCUIT *1*
SIGNAL FLOW DIAGRAM
SHEET NO: 015 0214
B
STRING ENSEMBLE
PAT. APPLIED FOR

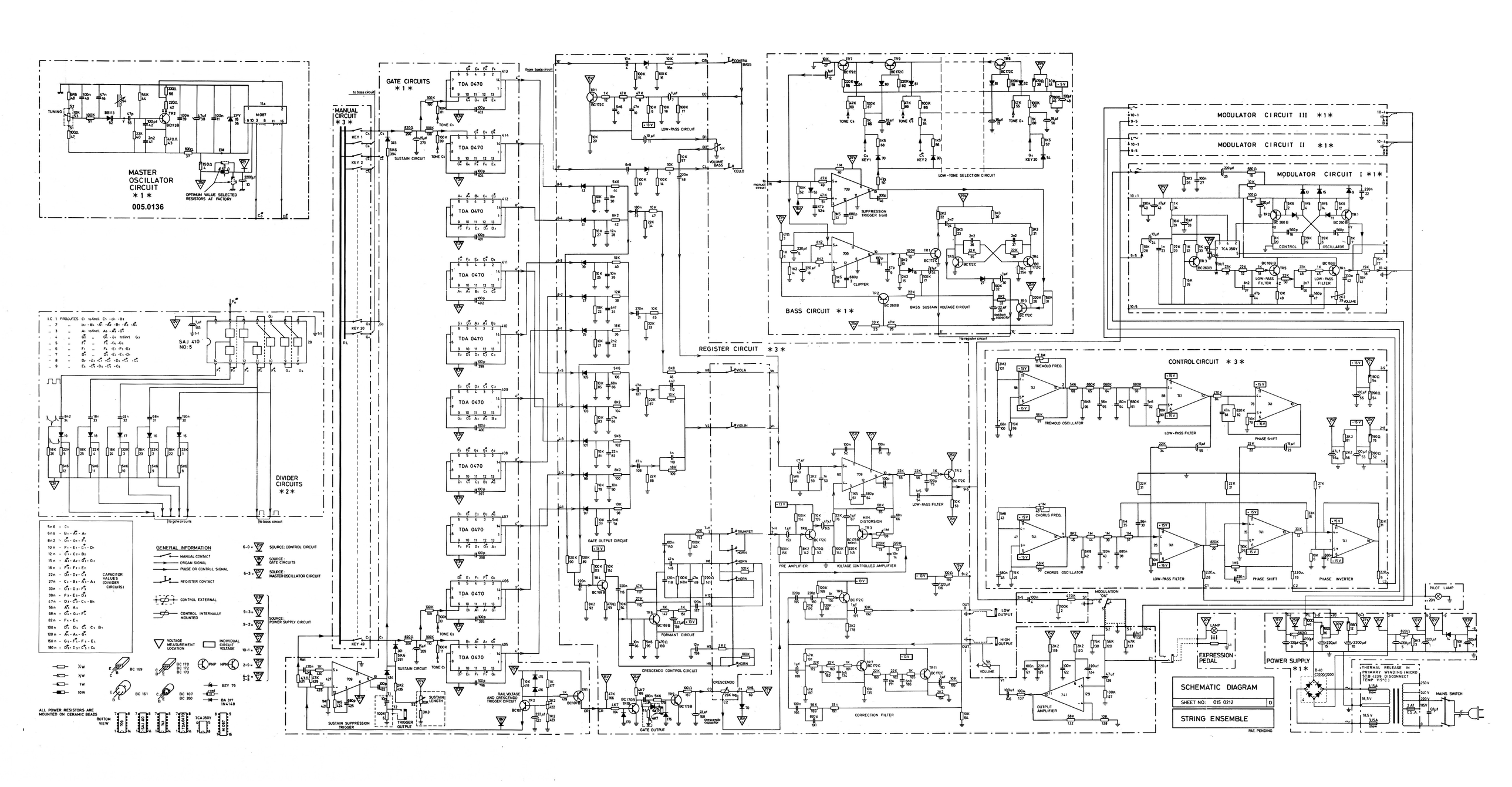
MASTER OSCILLATOR CIRCUIT *1*
005.0136
OPTIMUM VALUE SELECTED RESISTORS AT FACTORY
GATE CIRCUITS *1*
MANUAL CIRCUIT *3*
TDA 0470
SUSTAIN CIRCUIT
SUSTAIN SUPPRESSION TRIGGER
RAIL VOLTAGE AND CRESCENDO TRIGGER CIRCUIT
GATE OUTPUT CIRCUIT
GATE OUTPUT
FORMANT CIRCUIT
CRESCENDO CONTROL CIRCUIT
LOW-PASS CIRCUIT
REGISTER CIRCUIT *3*
BASS CIRCUIT *1*
SUPPRESSION TRIGGER (rail)
CLIPPER
BASS SUSTAIN VOLTAGE CIRCUIT
LOW-TONE SELECTION CIRCUIT
MODULATOR CIRCUIT III *1*
MODULATOR CIRCUIT II *1*
MODULATOR CIRCUIT I *1*
CONTROL CIRCUIT *3*
TREMOLO FREQ.
TREMOLO OSCILLATOR
CHORUS FREQ.
CHORUS OSCILLATOR
LOW-PASS FILTER
PHASE SHIFT
PHASE INVERTER
PRE AMPLIFIER
VOLTAGE CONTROLLED AMPLIFIER
MIN DISTORSION
CORRECTION FILTER
OUTPUT AMPLIFIER
EXPRESSION PEDAL
POWER SUPPLY *1*
THERMAL RELEASE IN PRIMARY WINDING (MICRO STB 4239 DISCONNECT TEMP. 115°C)
MAINS SWITCH
PILOT LAMP
SAJ 410 NO: 5
DIVIDER CIRCUITS *2*
GENERAL INFORMATION
CAPACITOR VALUES (DIVIDER CIRCUITS)
SOURCE: CONTROL CIRCUIT
SOURCE: GATE CIRCUITS
SOURCE: MASTER OSCILLATOR CIRCUIT
SOURCE: POWER SUPPLY CIRCUIT
ALL POWER RESISTORS ARE MOUNTED ON CERAMIC BEADS
BOTTOM VIEW
SCHEMATIC DIAGRAM
SHEET NO: 015 0212
STRING ENSEMBLE
PAT. PENDING

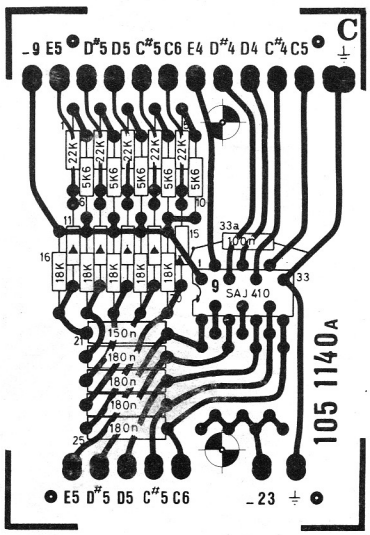

310 2104	CAPACITOR	33a
420 0317	DIODE	11…15
210 3223	RESISTOR	1…5
210 3183	"	16…20
210 3562	"	6…10
310 2154	CAPACITOR	21
310 2184	"	22…25
436 0410	I.C.	33
105 1140 A	CIRC.BOARD	
PART NO.	NAME	POSITION NO.

DIVIDER CIRCUIT C

PART NO. 005 0131 | E

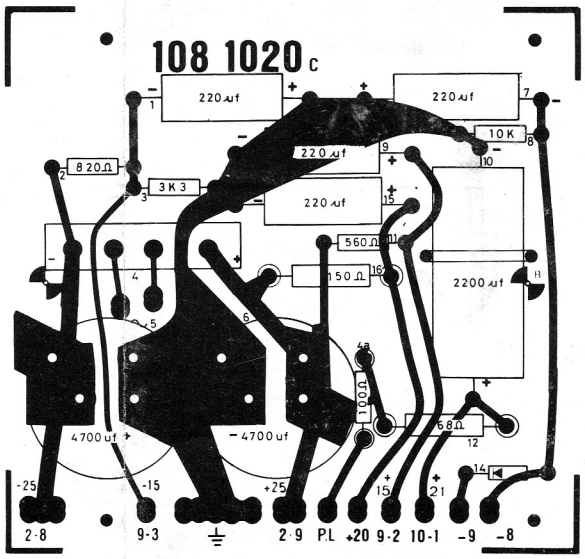

213 3151	RESISTOR	16
212 3101	"	4a
212 3561	"	11
210 3821	"	2
210 3332	"	3
210 3103	"	8
213 3689	"	12
314 6221	EL CAPACITOR	1,7,9,15
314 6222	" "	10
315 9472	" "	5,6
420 0317	DIODE	14
775 0002	CABLE TIE	1X
900 0031	BEAD	6X
430 2206	RECTIFIER	4
108 1020C	CIRC.BOARD	
CODE NO.	NAME	POSITION NO.

POS. NO.	1 – 6	4a,7 – 16

POWER SUPPLY

PART NO. 008 0066 | C

	RESISTOR	
210 3562	"	8-14,53-59,99-105,145-151
210 3183	"	22-28,67-73,113-119,159-165
210 3223	"	1-7,46-52,92-98,138-144
310 2562	CAPACITOR	34
310 2682	"	35,77,125
310 2822	"	127,167
310 2123	"	33,36
310 2153	"	76,124,171,173
310 2273	"	32,79,80,123
310 2333	"	170,172
310 2473	"	31,78
310 2563	"	81,122
310 2683	"	169
310 2104	"	30,75
310 2124	"	121,126,168
314 8108	"	183
420 0317	DIODE	15-21,60-66,106-112,152-158
436 0410	I.C.	29,74,120,166
500 0905	JUMPER WIRE	89,135,136,181
105 1110C	CIRCUIT BOARD	
PART NO.	NAME	POSITION NO.

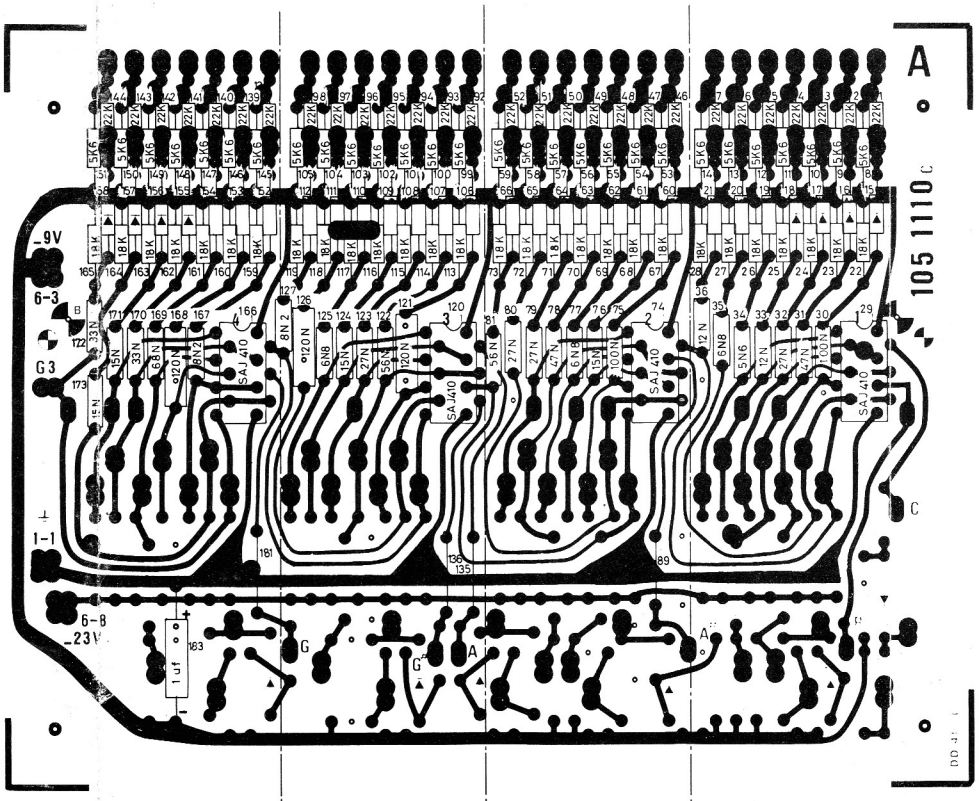

COMPONENT NO.	138 - 183	92 - 137	46 - 91	1 - 45

DIVIDER CIRCUIT A

PART. NO. 005 0129 | C

	RESISTOR	
210 3562	"	8-14,53-59,99-105,145-151
210 3183	"	22-28,67-73,113-119,159-165
210 3223	"	1-7,46-52,92-98,138-144
310 2822	CAPACITOR	34
310 2103	"	75,79,125,126
310 2123	"	169
310 2183	"	33,78,80
310 2223	"	124,168,171
310 2333	"	32
310 2393	"	77,121,123
310 2473	"	170,172
310 2683	"	31,35
310 2823	"	76,174
310 2104	"	122,167,173,175a
310 2154	"	30,36,81
420 0317	DIODE	15-21,60-66,106-112,152-158
436 0410	I.C.	29,74,120,166
500 0905	JUMPER WIRE	82,83,127,128,175
105 1120C	CIRC. BOARD	
PART NO	NAME	COMPONENT NO

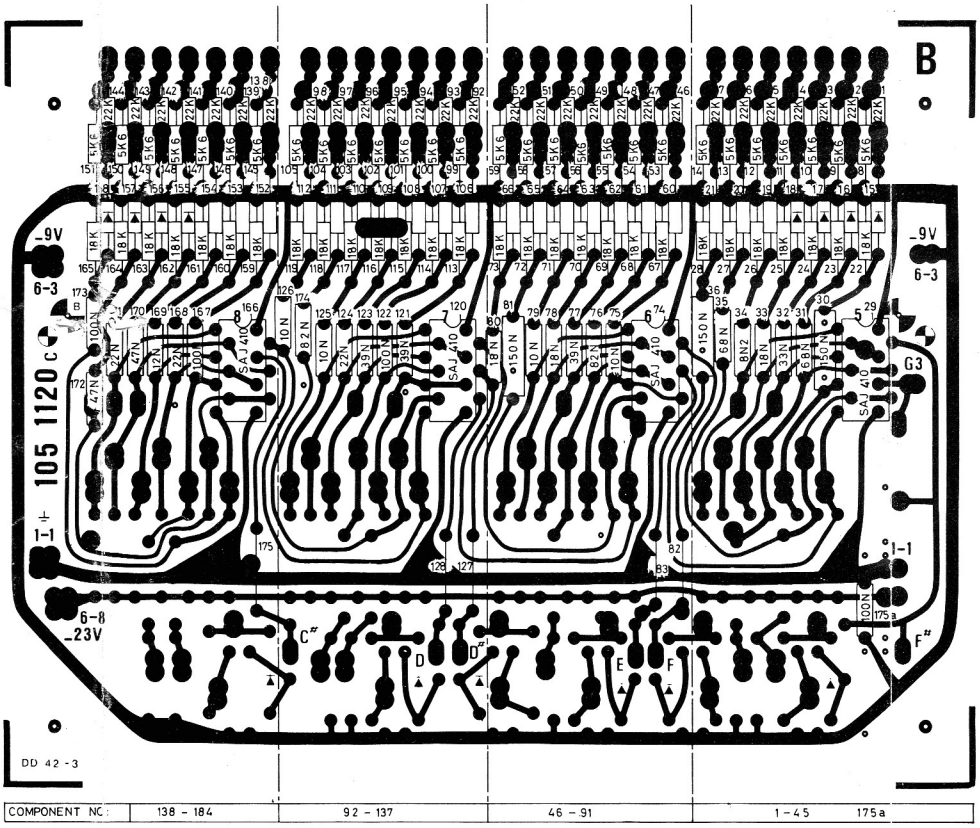

COMPONENT NO.	138 - 184	92 - 137	46 - 91	1 - 45 175a

DIVIDER CIRCUIT B

PART NO. 005 0130 | D

PART. NO.	NAME	POSITION NO.
900 0031	BEAD	4x
210 - 3185	RESISTOR	43
210 - 3221	RESISTOR	9, 19, 28
210 3222	"	56
210 3332.	"	81
210 - 3822	"	45
210 - 3562	"	68
210 - 3682	"	42, 96
210 - 3103	"	6, 25, 33, 79, 90
210 - 3153	"	49, 99
210 - 3223	"	21, 22, 31, 34
210 - 3273	"	7
210 - 3333	"	11, 12, 16
210 - 3563	"	50, 97
210 - 3474	"	84
210 - 3684	"	61, 64, 65, 93
210 - 3824	"	20, 82
210 - 3105	"	35, 37, 39, 44
210 - 3155	"	10
210 - 3225	"	101
212 - 3391	"	52, 54
213 - 3181	"	5a, 76
	CAPACITOR	
310 - 2562	"	92
310 - 2473	"	83
310 - 2563	"	30, 95
310 - 2683	"	100
310 - 2124	"	40
310 - 2184	"	94
310 - 2224	"	13
310 - 2684	"	2, 38, 46
314 - 8159	EL CAPACITOR	23, 59
314 - 7479	"	56a
314 - 7101	"	53, 55
230 - 0063	POT. METER	48, 71
436 - 0741	I. C.	3, 15, 26, 47, 78, 88, 98
500 - 0905	JUMPER WIRE	8, 36, 41, 57, 53a, 59a
112 - 1020 B	CIRCUIT BOARD	

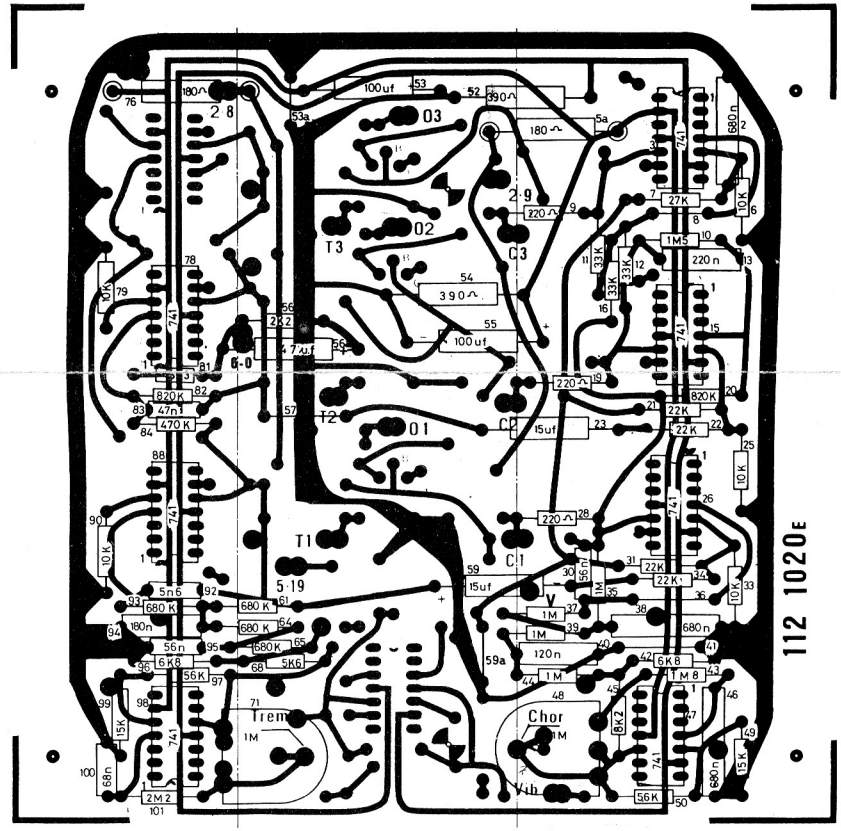

R & C	76 - 101	52 - 75	1 - 51
TRANSISTOR			

CONTROL CIRCUIT

PART. NO. 012 - 0025 | C

216 3479	RESISTOR	1
212 3101	"	4
210 3101	"	47
210 3221	"	43,45
210 3331	"	56
210 3821	"	37
210 3682	"	48
210 3223	"	40
210 3563	"	44
210 3104	"	50
310 2104	CAPACITOR	11,39,49
310 2473	"	46
310 2222	"	41
313 5479	"	55
313 2101	"	42
314 7479	"	38
314 6222	"	10
411 1732	TRANSISTOR	TR2
424 0018	DIODE	36
430 0113	"	52
436 0087	I.C	11a
500 0905	JUMPERWIRE	7,58
600 3590	COIL	54
775 0002	CABLE TY	1X
900 0031	BEAD	4X
105 1190 B	CIRCUIT BOARD	
775 0044	SCREW	1X
750 0352	WASHER	1X
PART NO.	NAME	POSITION NO.

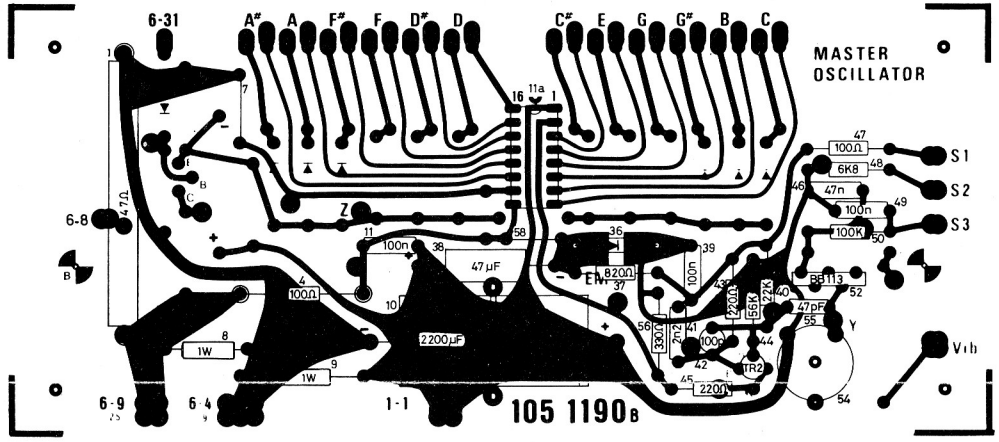

COMPONENT NO.	4---- ----58
TRANSISTOR NO.	TR2

MASTER OSCILLATOR

SHEET NO. 005 0136 D

210 3101	RESISTOR	8
210 3681	"	16
210 3102	"	7,2 ,32,33,34,45,51
210 3152	"	4 14
210 3332	"	26
210 3562	"	2,12
210 3103	"	10,20,41,49
210 3153	"	17,35,38
210 3183	"	31
210 3223	"	29,36,48,50,52
210 3393	"	6,19
310 2102	CAPACITOR	23
310 2272	"	46
310 2822	"	37
310 2104	"	27,53
310 2224	"	22
310 2334	"	40,42
313 2479	"	44
313 2561	"	5 18 47
314 8109	EL CAPACITOR	24
314 7339	"	30
314 7479	"	43
314 6221	"	1,25
230 0055	POT. METER	39
420 0317	DIODE	3,9,11,13,15
411 1692	TRANSISTOR	TR 4,5
411 2602	"	TR 1,2,3
436 0350	IC	21
125 0151	TUBING	3x
900 0031	BEAD	2x
112 1014 D	CIRC. BOARD	
PART NO.	NAME	POSITION NO.

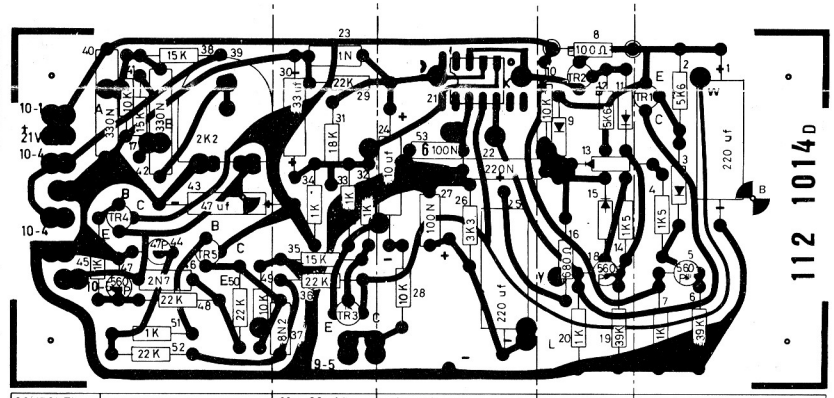

COMPONENT	17, 38-52	23 29-37	21-28, 53	8-20	1-7
TRANSISTOR	TR 4,5	TR 3		TR 2	TR 1

MODULATOR CIRCUIT B

PART NO 012 0034 E

210 .3101	RESISTOR	137,167
210 .3221	"	141
210 .3471	"	93,139,143
210 .3102	"	12, 71,147,151,161,170,185
210 .3152	"	21
210 .3222	"	59,119,123,178,184
210 .3472	"	164,165
210 .3562	"	44,58,69,95,102,106,175
210 .3682	"	46
210 .3822	"	42,92,100,104,142
210 .3103	"	3,6 ,16a,18,20,21,23,25,27,29,40,45,47,53,57
	"	77,79,81,83,85,94,98,111,114,128,135,155,156.
	"	192,193,194.
210 .3123	"	38
210 .3183	"	36,109
210 .3223	"	33,34,55,56,76,87,88,152,160,163,172,182
210 .3273	"	116,179
210 .3333	"	197
210 .3473	"	8,9,117,166,187,191,133
210 .3563	"	120,189
210 .3683	"	65,132
210 .3104	"	14,16,17,113,127,140,144,154,140a,15,13
210 .3124	"	89,90,169,181
210 .3224	"	62,72,73
212 .3101	"	159
310 .2102	CAPACITOR	50,110
310 .2152	"	54,134
310 .2222	"	22
310 .2472	"	24,112
310 .2562	"	19,78
310 .2682	"	186,1
310 .2103	"	26,74,80,96,4
310 .2123	"	28,158,171
310 .2183	"	30
310 .2223	"	82
310 .2273	"	162
310 .2473	"	10,84,107,108,148,149
310 .2683	"	66,86
310 .2104	"	51,52,121,122,150,196
310 .2124	"	118,157
310 .2184	"	32
310 .2224	"	48,91,115
310 .2274	"	31
310 .2684	"	174
313 .2104	"	63
313 .2724	"	75,180,195
313 .2684	"	64
313 .2824	"	190
411 .1692	TRANSISTOR	TR 4-5
411 .1702	"	TR 10
411 .1723	"	TR 1-2-6-7-8-11
411 .1732	"	TR 9
412 .1732	"	TR 3
230 .0063	POT. METER	68

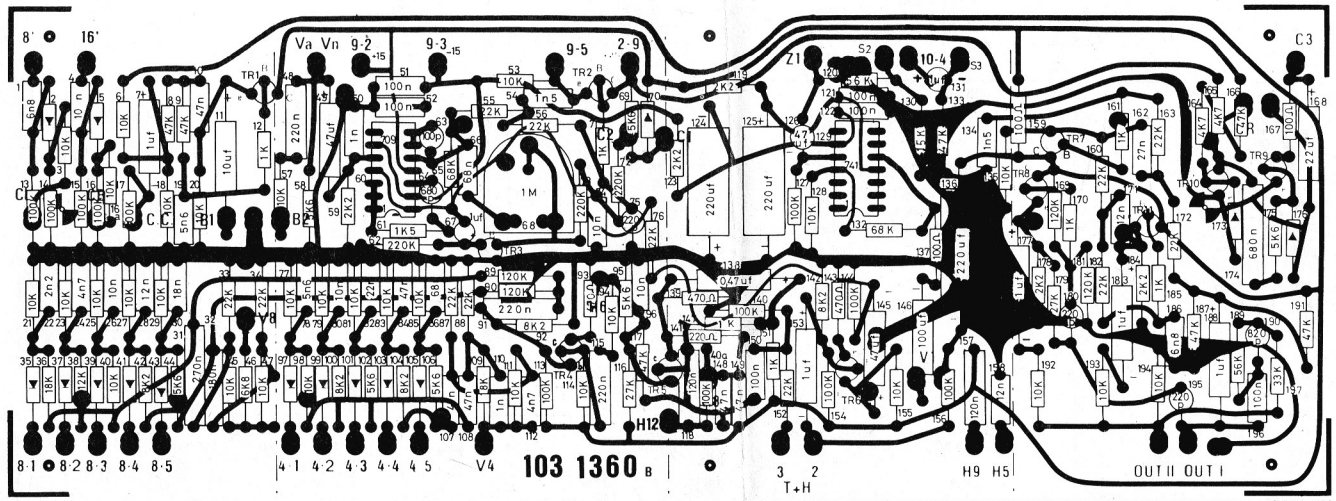

R & C	1 - 47	48 - 118	119 - 158	159 - 197
TRANSISTOR	TR 1	TR 2-3-4	TR 5-6	TR 7-8-9-10-11

314 .8477	ELCAPACITOR	138
314 .8108	"	7,153,177,183,188
314 .8109	"	11
314 .8229	"	168
314 .8479	"	49,145
314 .7101	"	146
314 .6221	"	124,125,136
315 .6108	"	67 ,131

210 .3153	RESISTOR	130
315 6479	ELCAPACITOR	126
420 0317	DIODE	2,5,35,37,39,41,43,70,97,99,101,103,105,173,176
436 .0709	IC	60
436 .0741	"	129
103 .1360B	CIRCUIT BOARD	
PART. NO.	NAME	POSITION NO.

REGISTER CIRCUIT

PART NO. 003 . 3016 G

210 3479	RESISTOR	3,50
210 3102	"	6,60,66,77,84,97,104,115,122,133,140,151,158
	"	169,176,187,194,205,212,223,230
210 3152	"	18,41,57,68,74,86,94,106,112,124,130,142,148,
	"	160,166,178,184,196,202,214,220,232
210 3222	"	10,15,22
210 3332	"	20,21,23
210 3822	"	7,8,33
210 3103	"	47,52,35a,44
210 3223	"	35,38,11
210 3122	"	14
210 3333	"	25
210 3473	"	28,49,51,55,69,72,89,92,107,110,125,128,143
	"	146,161,164,179,182,197,200,215,218,233
210 3104	"	17,32,58,67,75,85,95,105,113,123,131,141,149
	"	159,167,177,185,195,203,213,221,231,19
210 3154	"	31
210 3224	"	26,59,65,76,82,96,102,114,120,132,138,150,
	"	156,168,174,186,192,204,210,222,228,11
210 3105	"	40
213 3471	"	39
212 3181	"	45
310 2222	CAPACITOR	36,37
310 2272	"	24
313 2479	"	9,52a
313 2101	"	1,46
312 2681	"	2,42
314 8108	EL. CAPACITOR	12,30,34
314 8119	"	56,63,73,80,93,100,111,118,129,136,147,154,165,
	"	172,183,190,201,208,219,226
314 8229	"	29
314 6221	"	5,13,48
411 1723	TRANSISTOR	TR 1,3,4,5,6,7,8,9,10,11,12,13,14,15,16,17,18,19,20,21,
	"	22,23,24,25
411 2602	"	TR 2
420 0317	DIODE	16,27,53,54,61,62,64,70,71,78,79,81,83,90,91,98,
	"	99,101,103,108,109,116,117,119,121,126,127,134,135,
	"	137,139,144,145,152,153,155,157,162,163,170,171,173,
	"	175,180,181,188,189,191,193,198,199,206,207,209,
	"	211,216,217,224,225,227,229,234
436 0709	IC	4,43
500 0905	JUMPER WIRE	53a
103 1370A	CIRC. BOARD	
CODE NO.	NAME	POSITION NO.

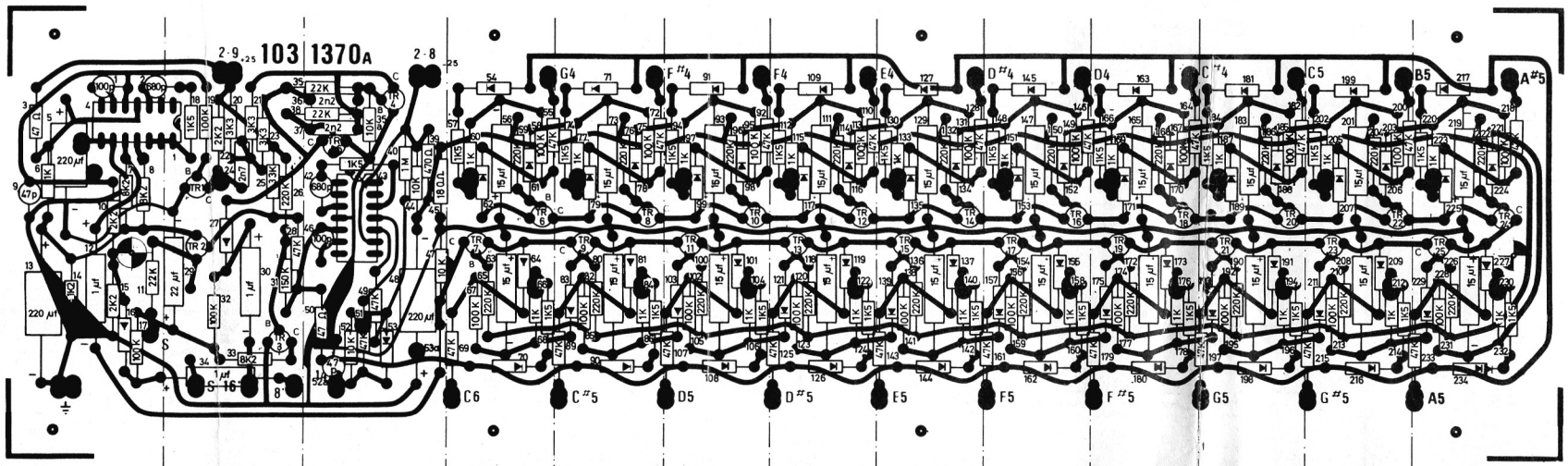

R & C	1 - 17	18 - 34	35 - 53a'	54 - 70	71 - 86,89,90	91 - 108	109 - 126	127 - 144	145 - 162	163 - 180	181 - 198	199 - 216	217 - 234
TRANSISTOR		1 - 3	4,5	6,7	8,9	10,11	12,13	14,15	16,17	18,19	20,21	22,23	24,25

BASS CIRCUIT

PART NO. 003 3025 G

PART NO	NAME	POSITION
210 3472	RESISTOR	5
210 3104	"	2,6
210 3474	"	1
310 2103	CAPACITOR	3
310 2104	"	4
420 0317	DIODE	4a
103 1680A	CIRCUIT BOARD	

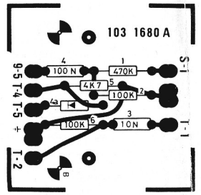

SUPPLEMENTARY CIRCUIT

PART NO. 003-2182 | B

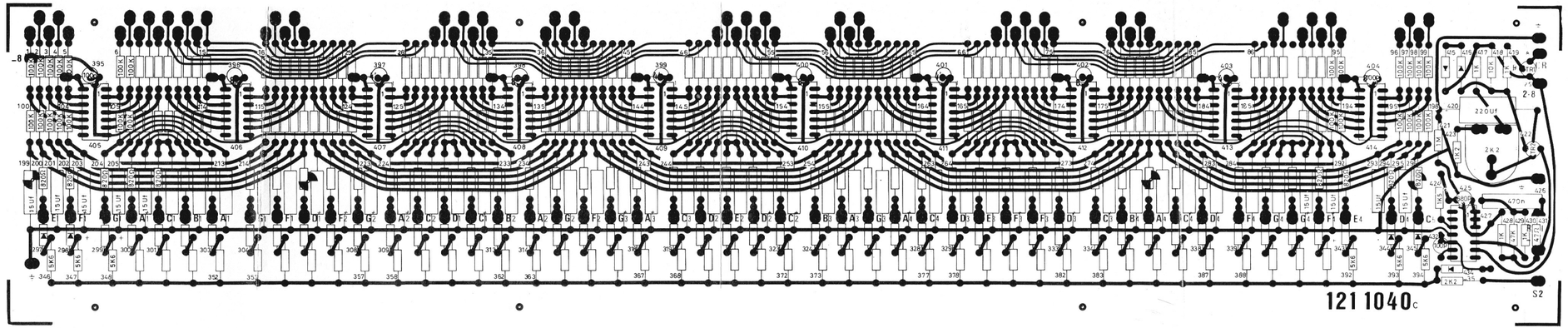

PART NO.	NAME	POSITION NO.
210 3222	RESISTOR	435
210 3479	"	431
210 3821	"	200,202,204 ... 296
210 3102	"	417,419,428,430
210 3122	"	423
210 3152	"	424
210 3103	"	418
210 3562	"	346,347,348 ... 394
210 3473	"	429
210 3104	"	1,2,3 89,91,92 188,190,191 ... 198
210 3105	"	421
313 2101	CAPACITOR	395,396,397 ... 404,432
313 2681	"	425
310 2474	"	426
314 8159	EL CAPACITOR	199,201,203 ... 295
314 6221	"	420
230 0055	POT.METER	422
420 0317	DIODE	297,298,299 ... 345,415,416,434
411 1072	TRANSISTOR	TR1
411 1610	"	TR2
436 1470	I.C.	405,406,407 ... 414
436 0705	"	427
121 1040C	CIRCUIT BOARD	

GATE CIRCUIT

PART NO 021 0001 | E

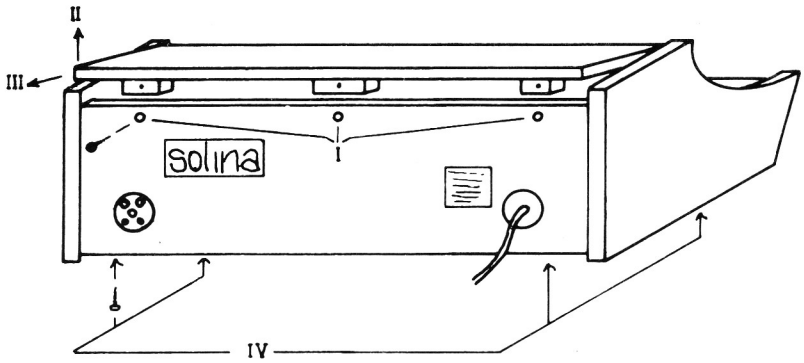

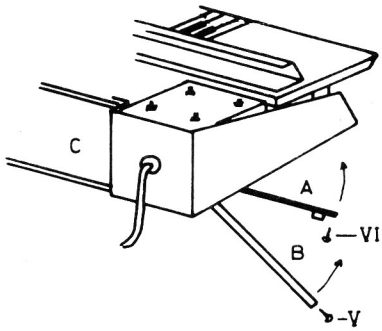

DEMONTAGE STRING-ENSEMBLE

1. Verwijder schroeven I
2. Til bovenblad op, zie II
3. Schuif bovenblad weg, zie III
4. Verwijder schroeven IV
5. De konstruktie kan nu uit de kast worden getild.
6. De panelen A en B zijn klapbaar na verwijdering van schroeven VI en V

DISASSEMBLY OF STRING-ENSEMBLE

1. Remove (3) screws I
2. Raise cover, see II
3. Push cover out of the way, see III
4. Remove (4) screws IV
5. Lift out unit from cabinet
6. Panels A and B will fold out of way after removing screws V and VI

DEMONTAGE STRING-ENSEMBLE
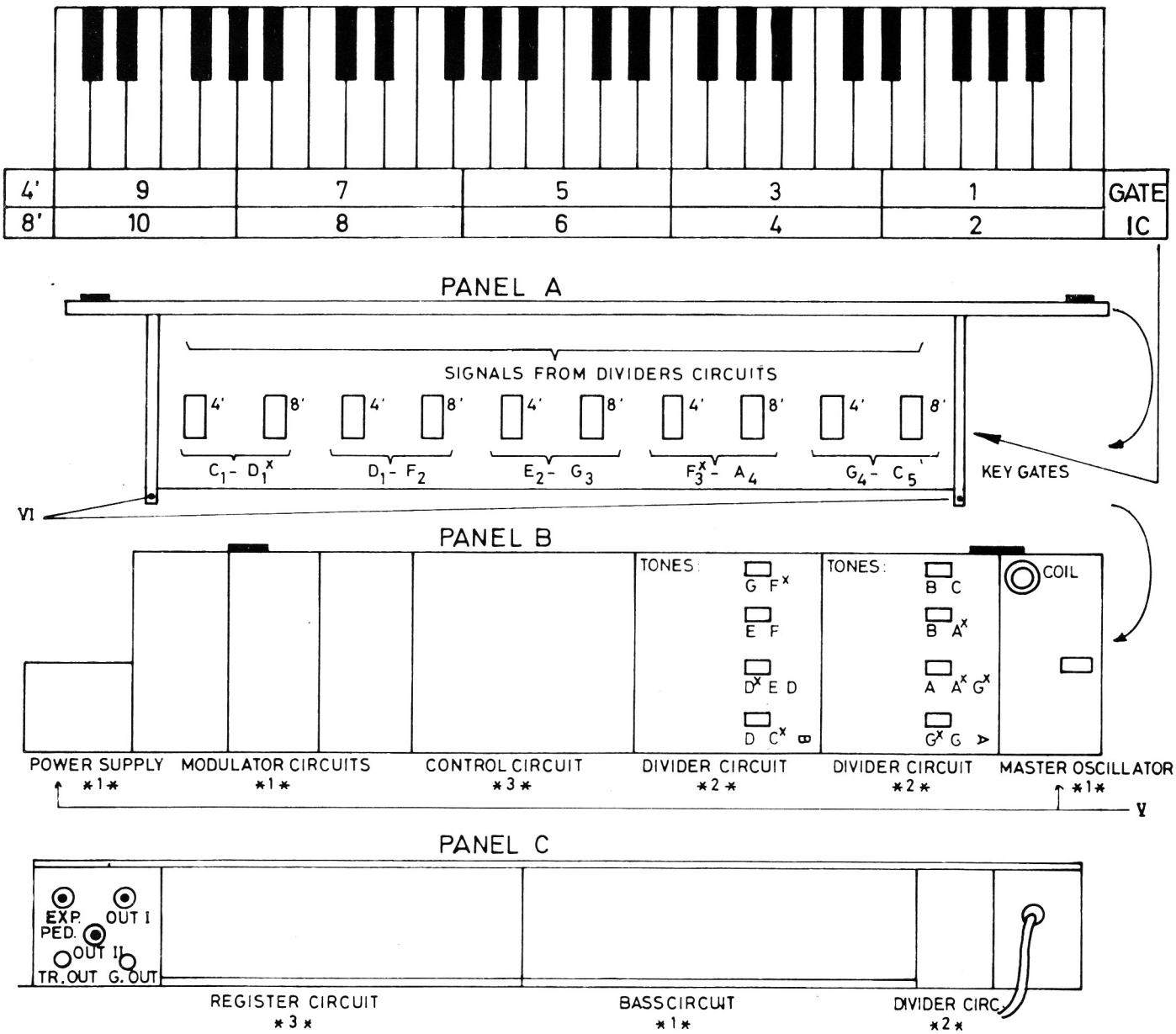
1. Schrauben rausdrehen (siehe I)
2. Oberbrett anheben (siehe II)
3. Oberbrett wegschieben (siehe III)
4. Schrauben rausdrehen (siehe IV)
5. Die Konstruktion kann jetzt aus der Kiste gehoben werden.
6. Die Paneelen a und b sind klappbar, nachdem die Schrauben rausgedreht sind. (siehe V und VI).