SCHEMATIC DIAGRAM

CRUMAR®

Musical Instruments

mod.

multiman s

2

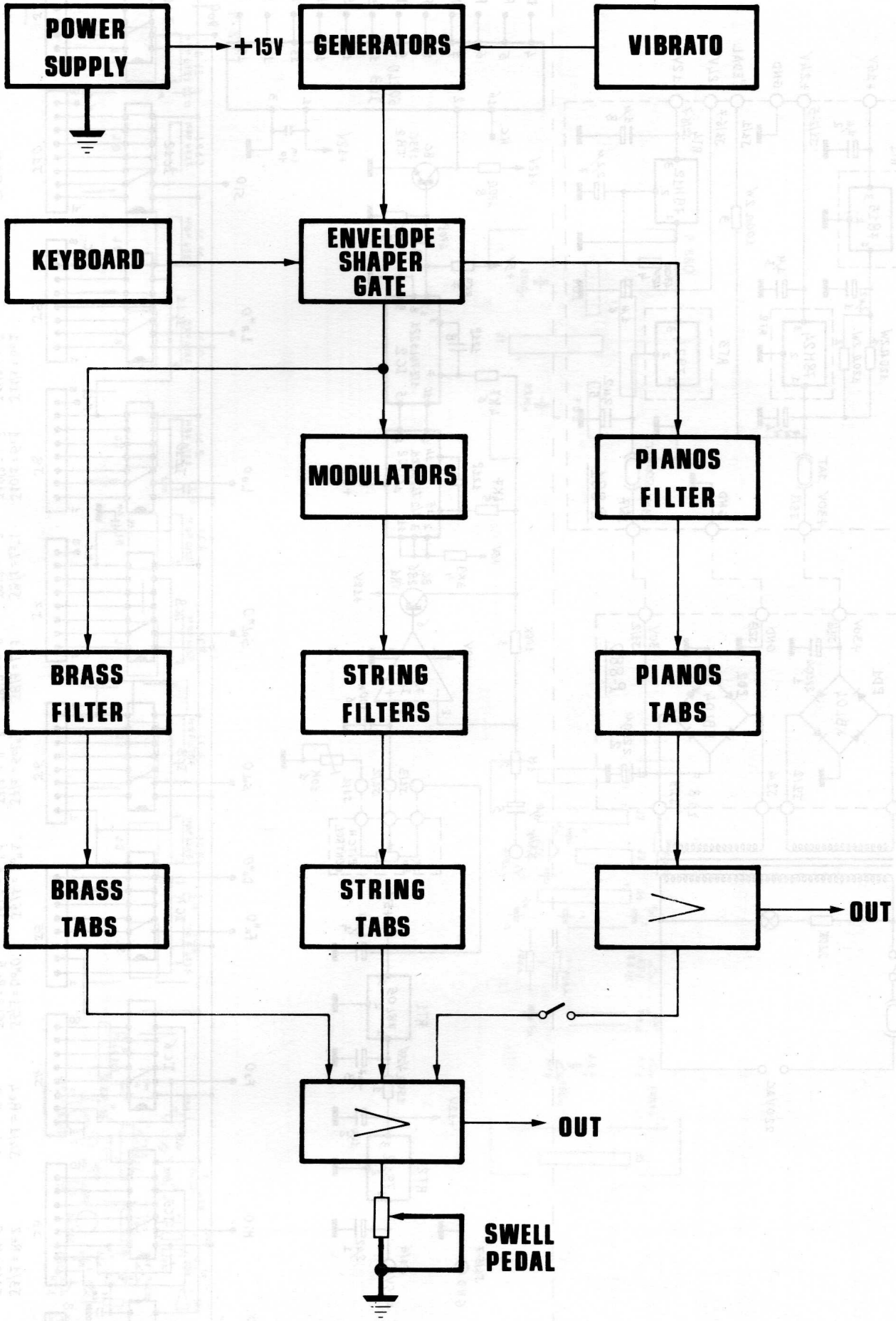

MODEL MULTIMAN-S			REVISION			
DATE	DRAWN BY S. Rosetti	DESIGNED BY R Brai	DATE			

DWG1

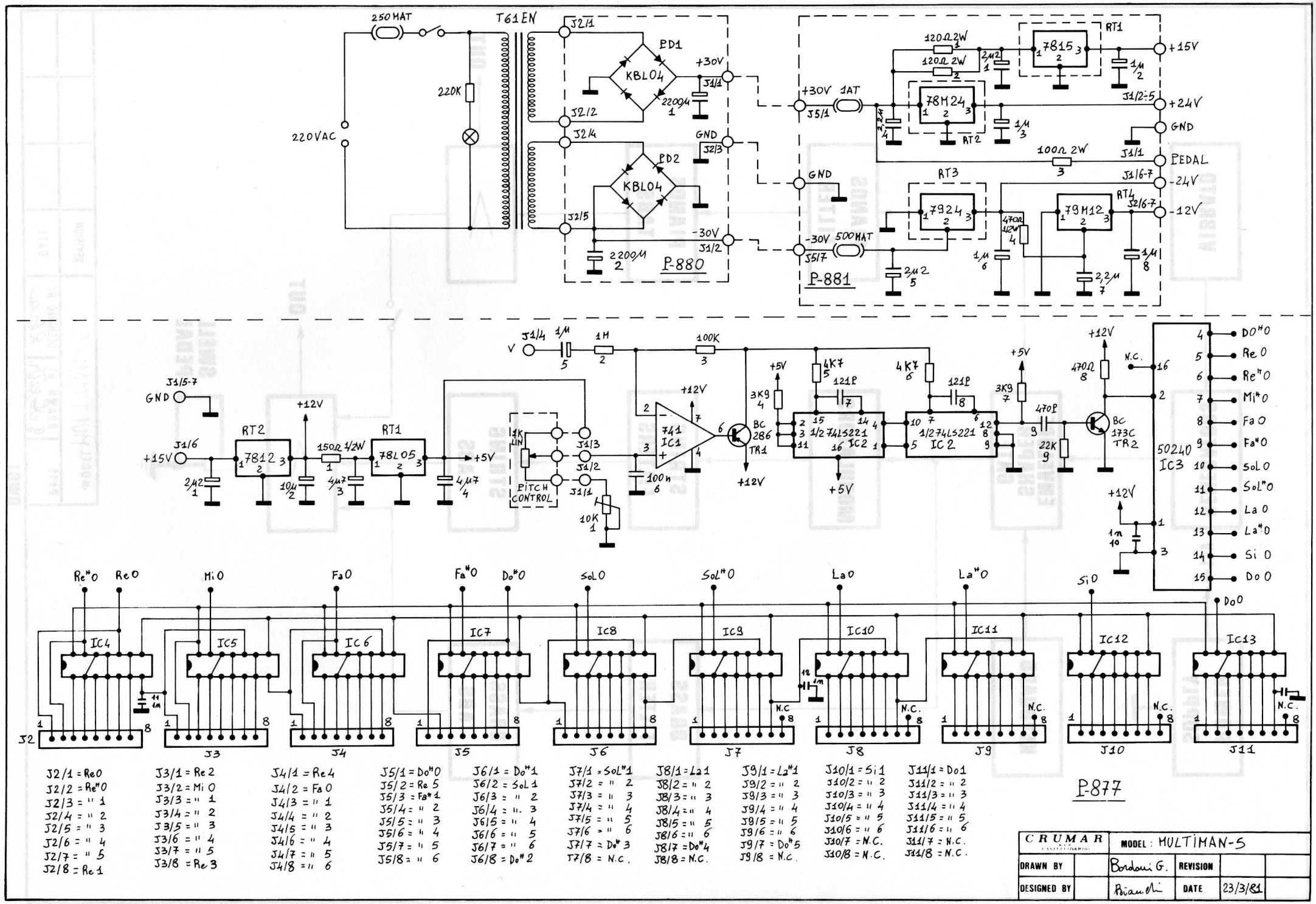

QUESTO DISEGNO E PROPRIETA PRIVATA E NON PUO ESSERE COPIATO RIPRODOTTO MOSTRATO A TERZI SENZA NOSTRA APPROVAZIONE SCRITTA

P-880

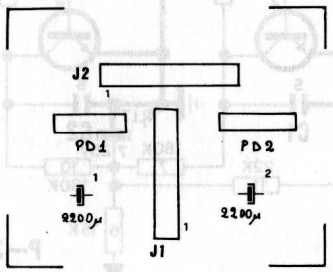

P-881

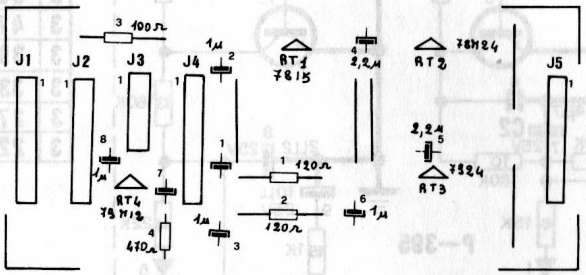

P-877

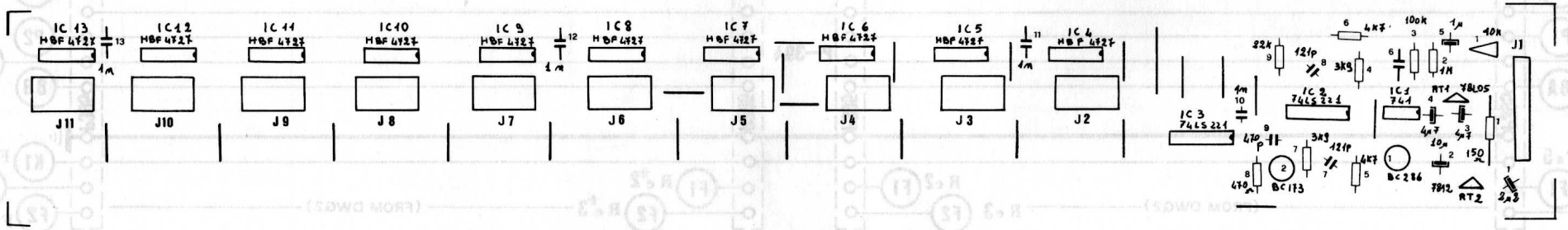

CRUMAR		MODEL: KULTIMAN S			
DRAWN BY		Bordoni G	REVISION		
DESIGNED BY		Bianchi	DATE	23/3/81	

DWG 2A

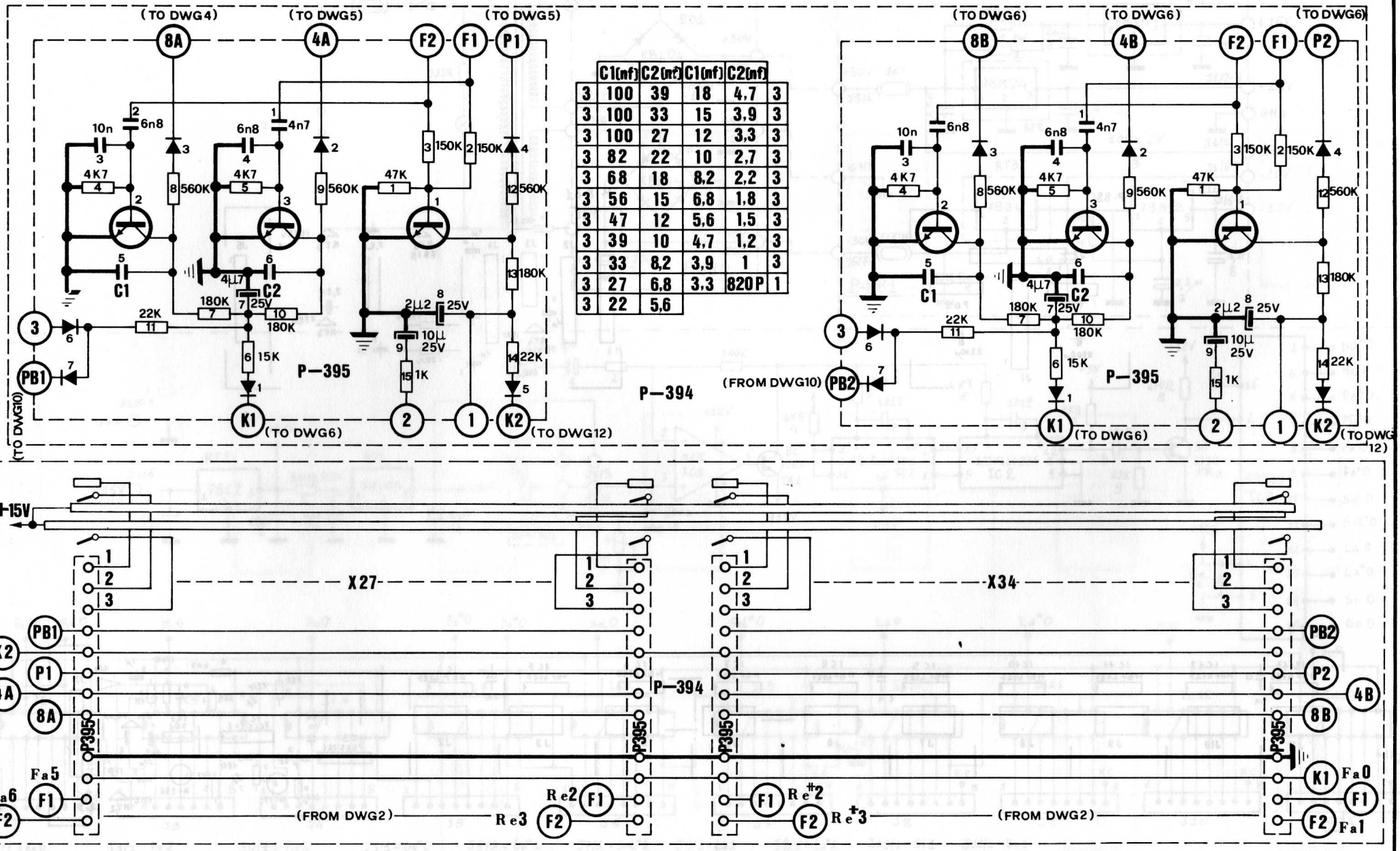

C1(nf)	C2(nf)	C1(nf)	C2(nf)	
100	39	18	4,7	3
100	33	15	3,9	3
100	27	12	3,3	3
82	22	10	2,7	3
68	18	8,2	2,2	3
56	15	6,8	1,8	3
47	12	5,6	1,5	3
39	10	4,7	1,2	3
33	8,2	3,9	1	3
27	6,8	3,3	820P	1
22	5,6			

MODEL MULTIMAN-S

DATE | DRAWN BY Naspetti G. | DESIGNED BY R Brau

DWG3

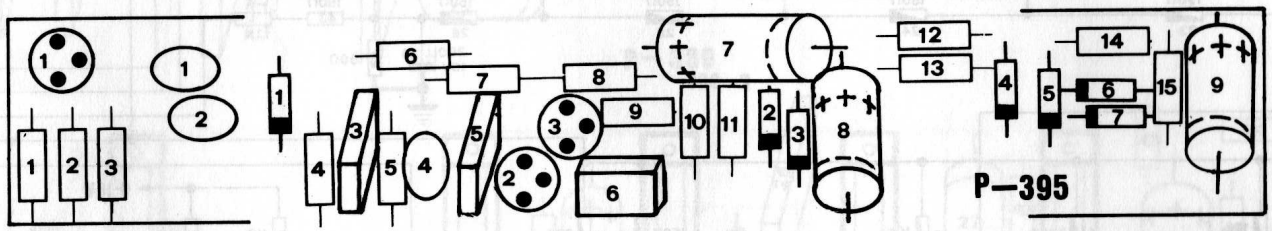

MODEL	MULTIMAN-S			REVISION			
DATE	DRAWN BY	DESIGNED BY		DATE			

DWG 3A

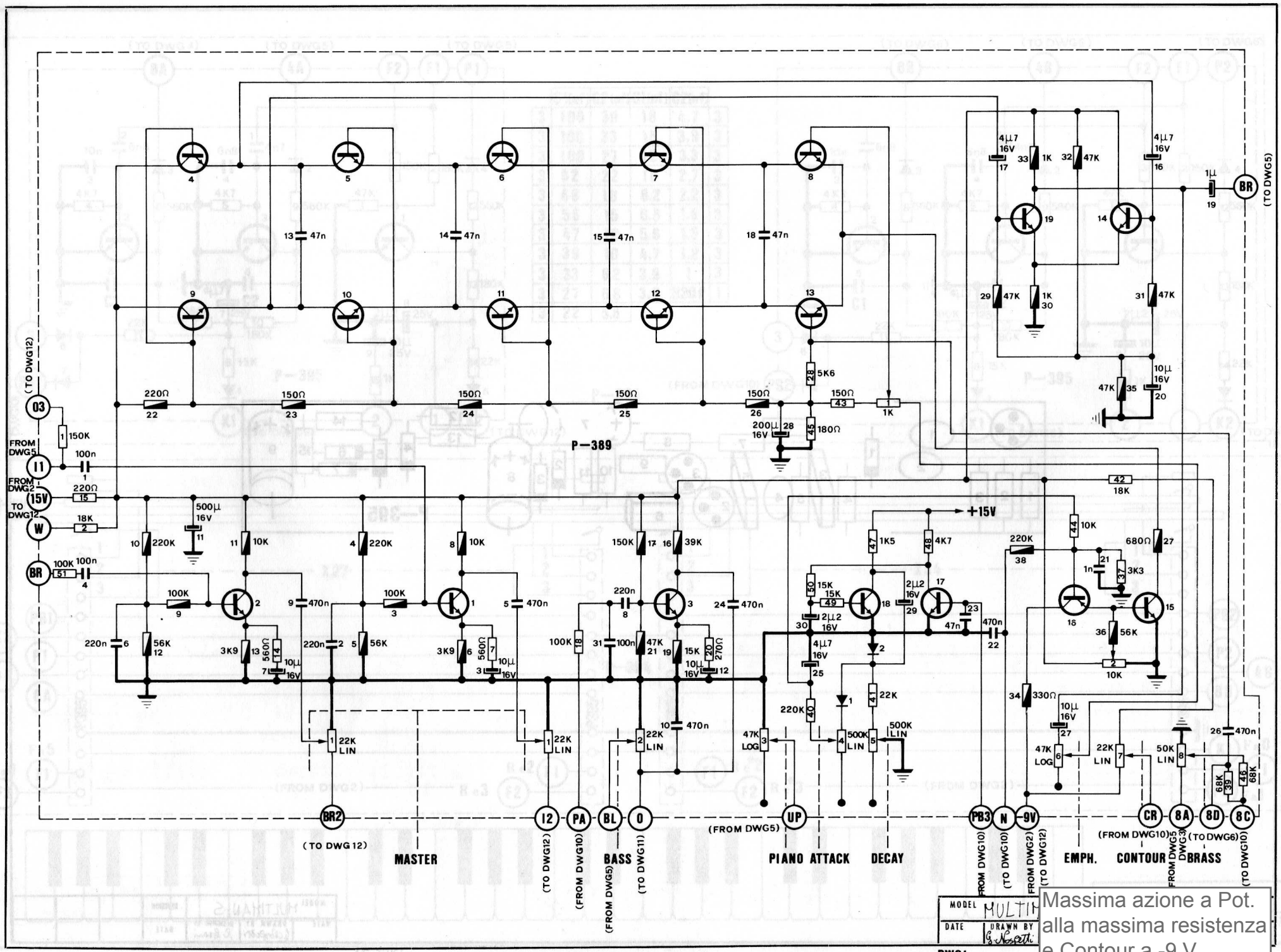

Massima azione a Pot.
alla massima resistenza
e Contour a -9 V

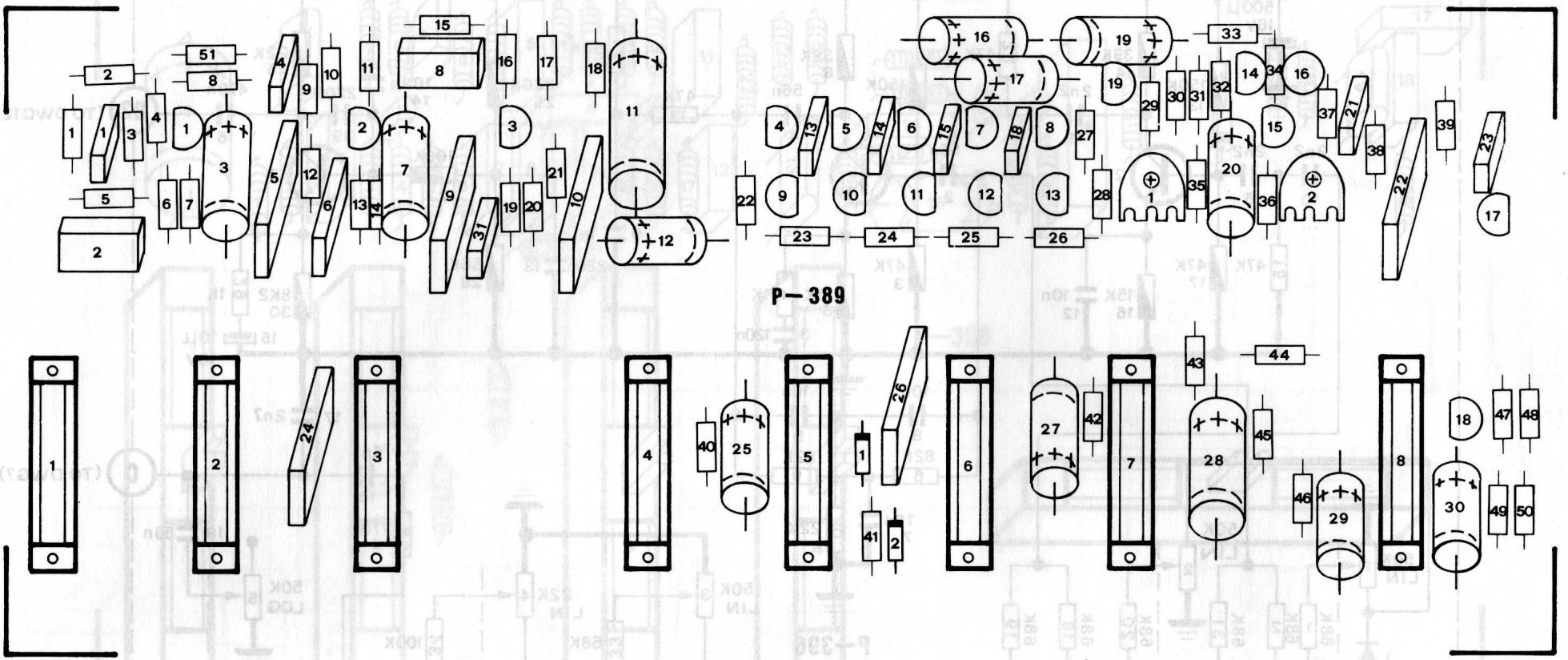

MODEL	HULTIMAN-S	REVISION			
DATE	DRAWN BY	DESIGNED BY	DATE		
	G. Rospetti	R. Brain			

DWG 4A

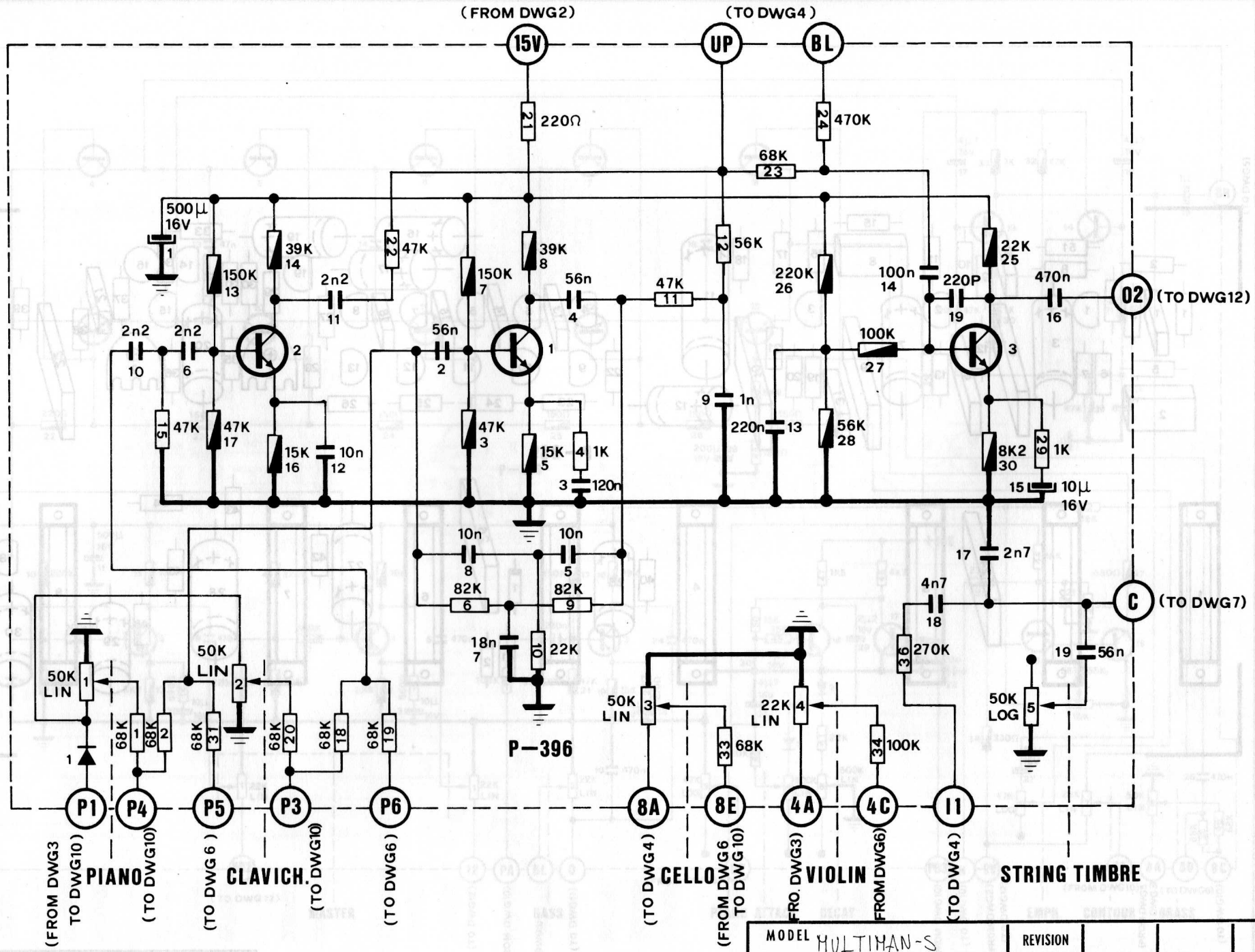

MODEL HULTIHAN-S			REVISION				
DATE	DRAWN BY G. Moretti	DESIGNED BY R Brau	DATE				

DWG5

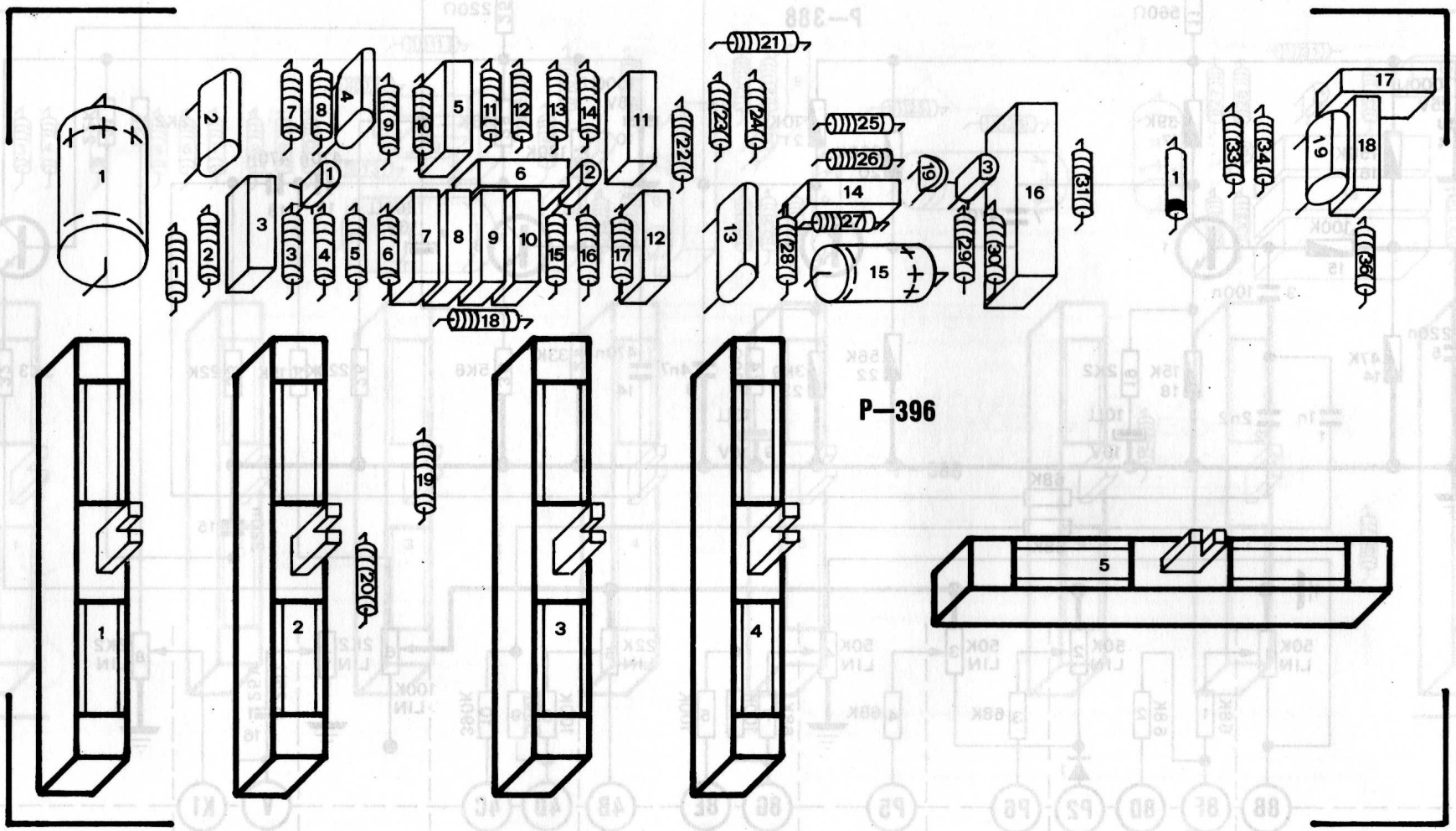

MODEL	MULTIMAN-S		REVISION			
DATE	DRAWN BY	DESIGNED BY	DATE			

DWG 5A

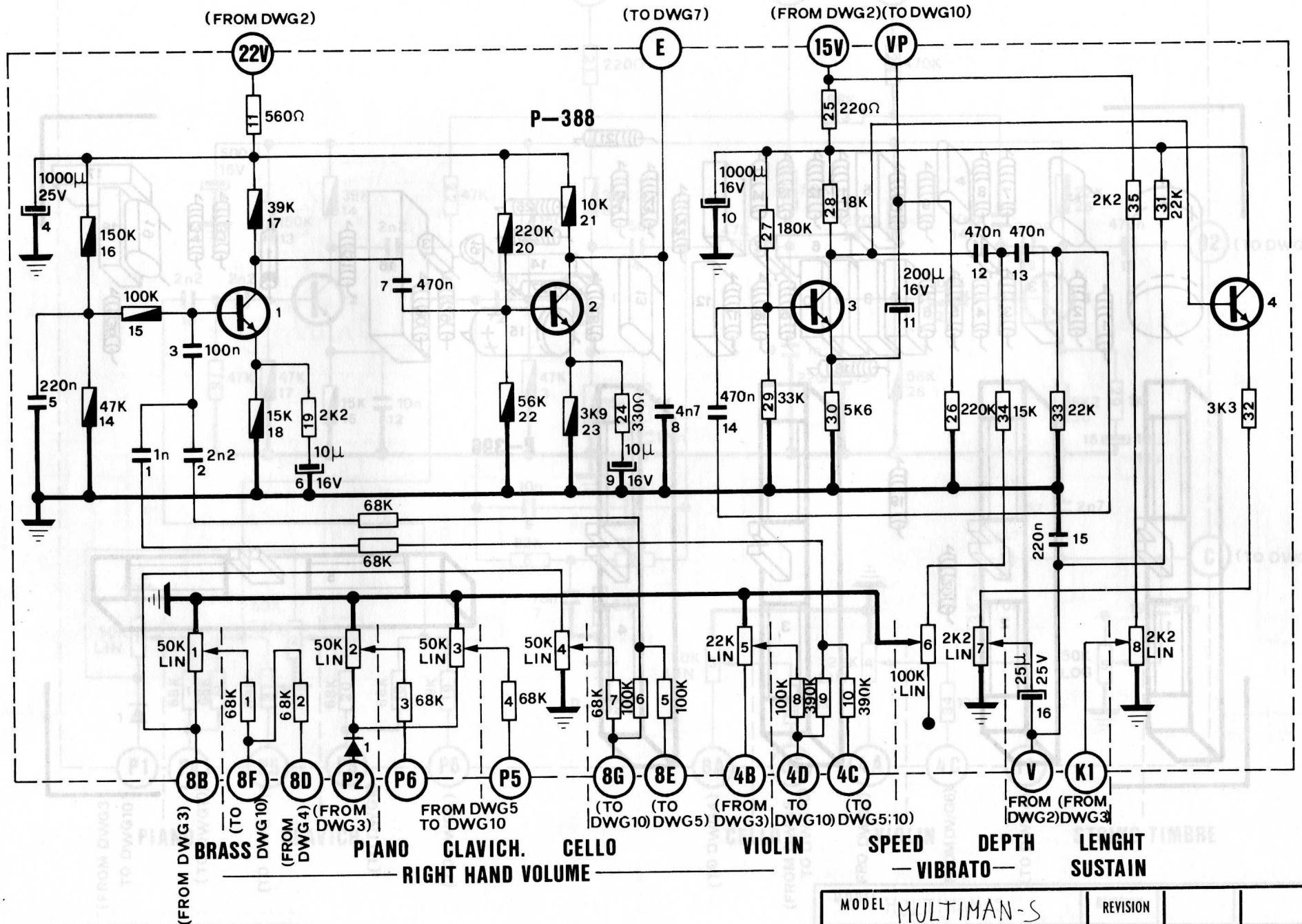

MODEL	MULTIMAN-S	REVISION				
DATE	DRAWN BY G. Rossetti	DESIGNED BY L. Brau	DATE			

DWG6

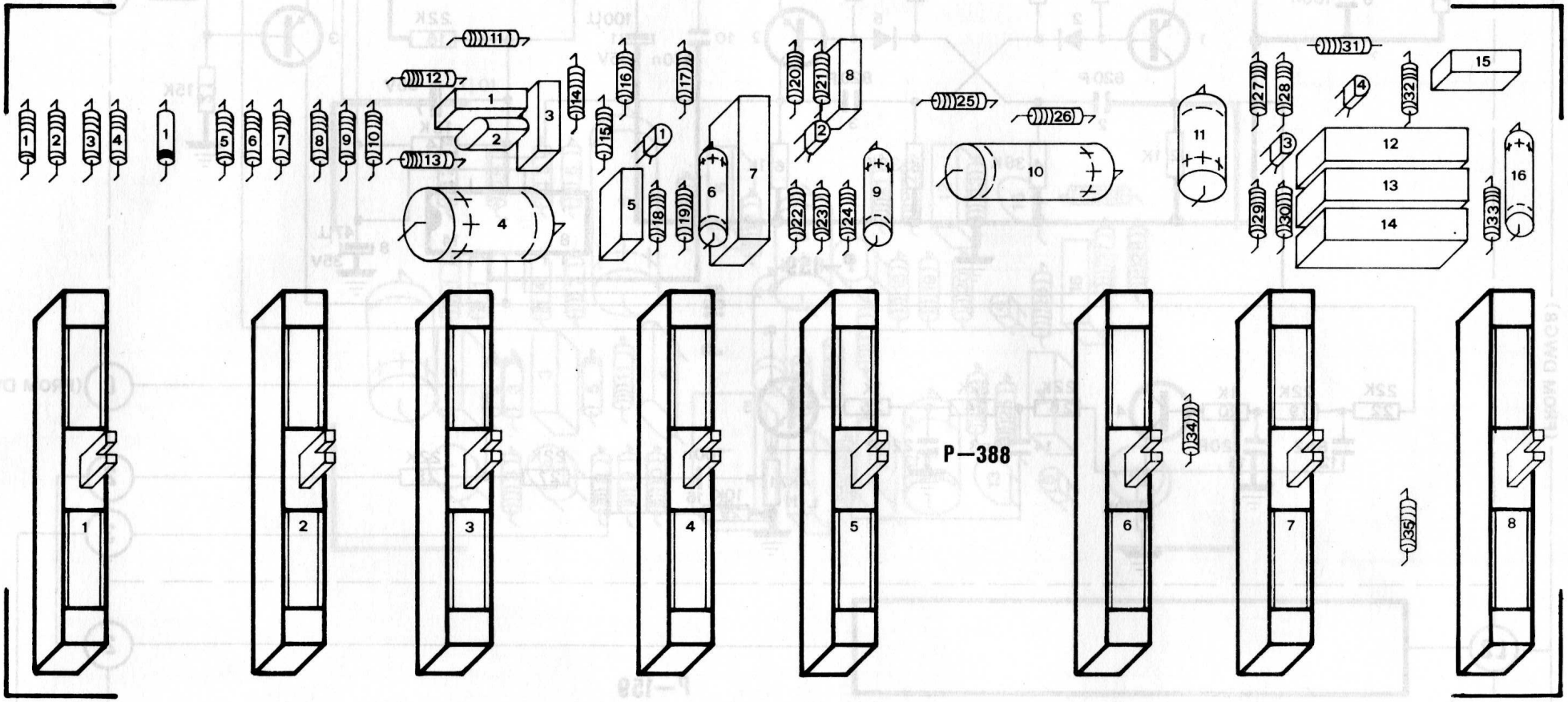

MODEL	MULTIMAN-S	REVISION			
DATE	DRAWN BY	DESIGNED BY	DATE		
		R Brian			

DWG 6A

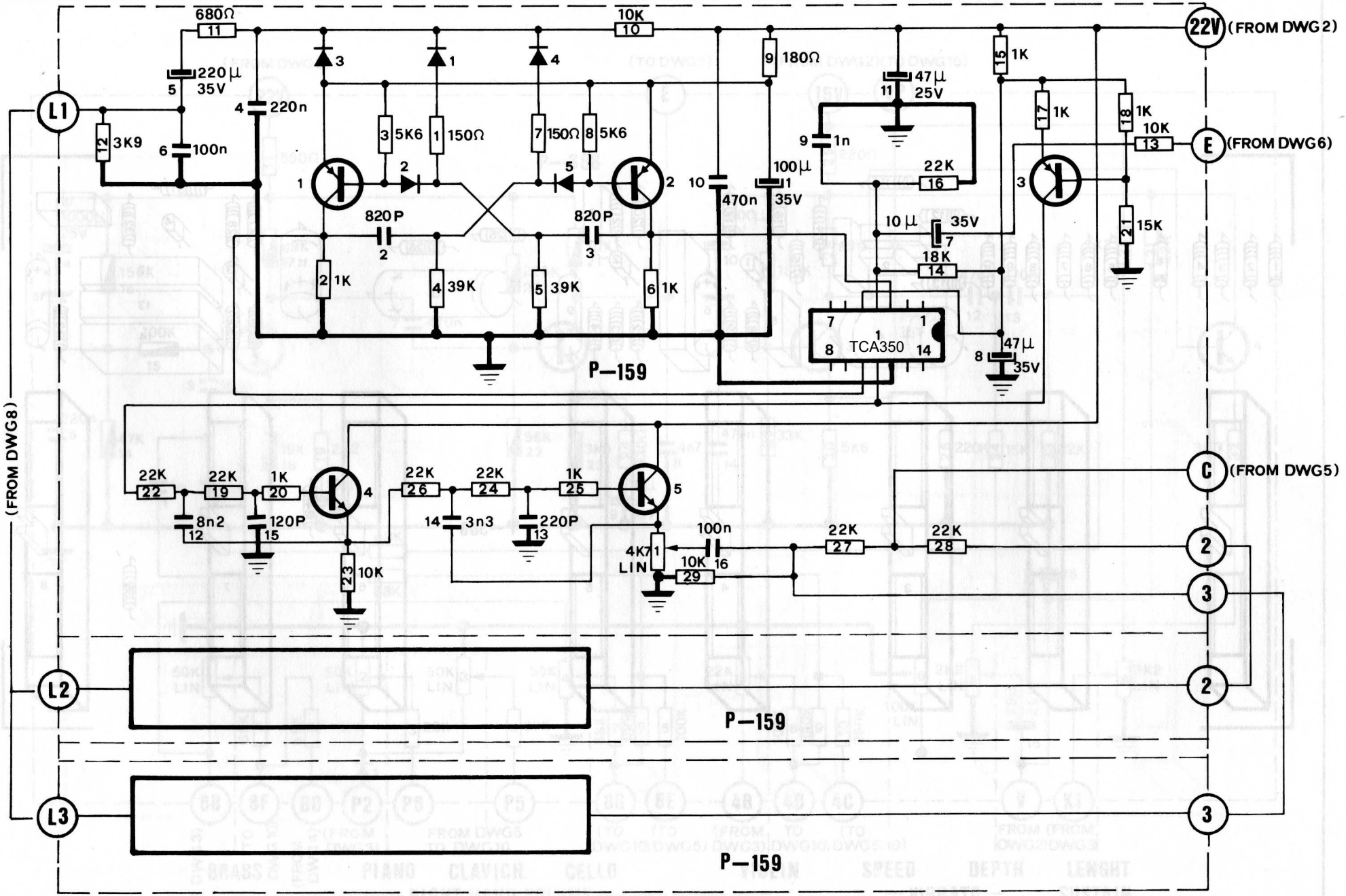

MODEL MULTIMAN-S			REVISION			
DATE	DRAWN BY G. Nogpett	DESIGNED BY R Brain	DATE			

DWG7

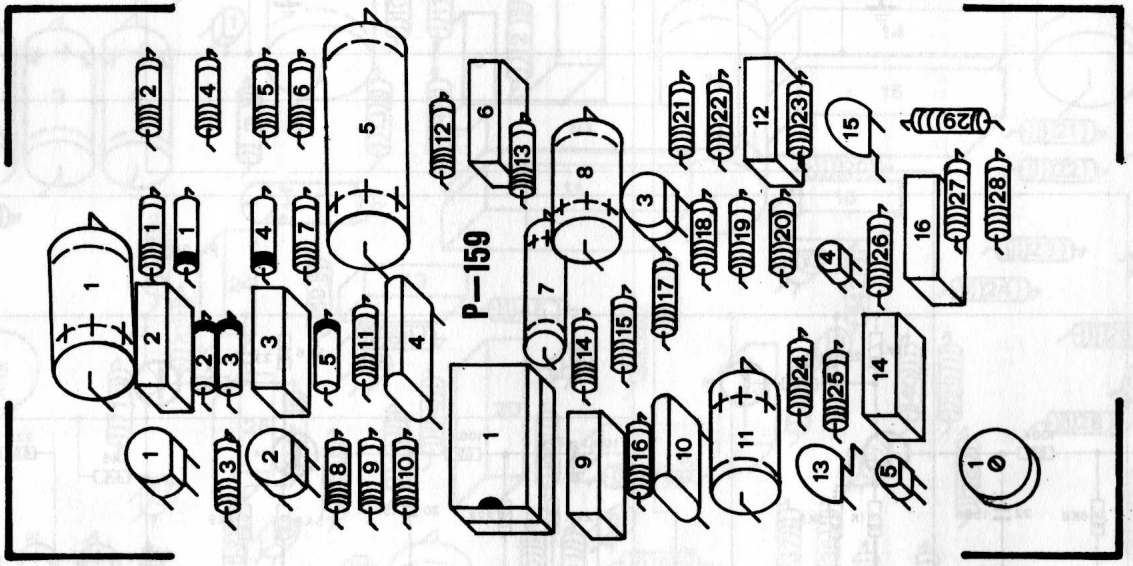

MODEL MULTIMAN-S			REVISION			
DATE	DRAWN BY	DESIGNED BY	DATE			

DWG 7A

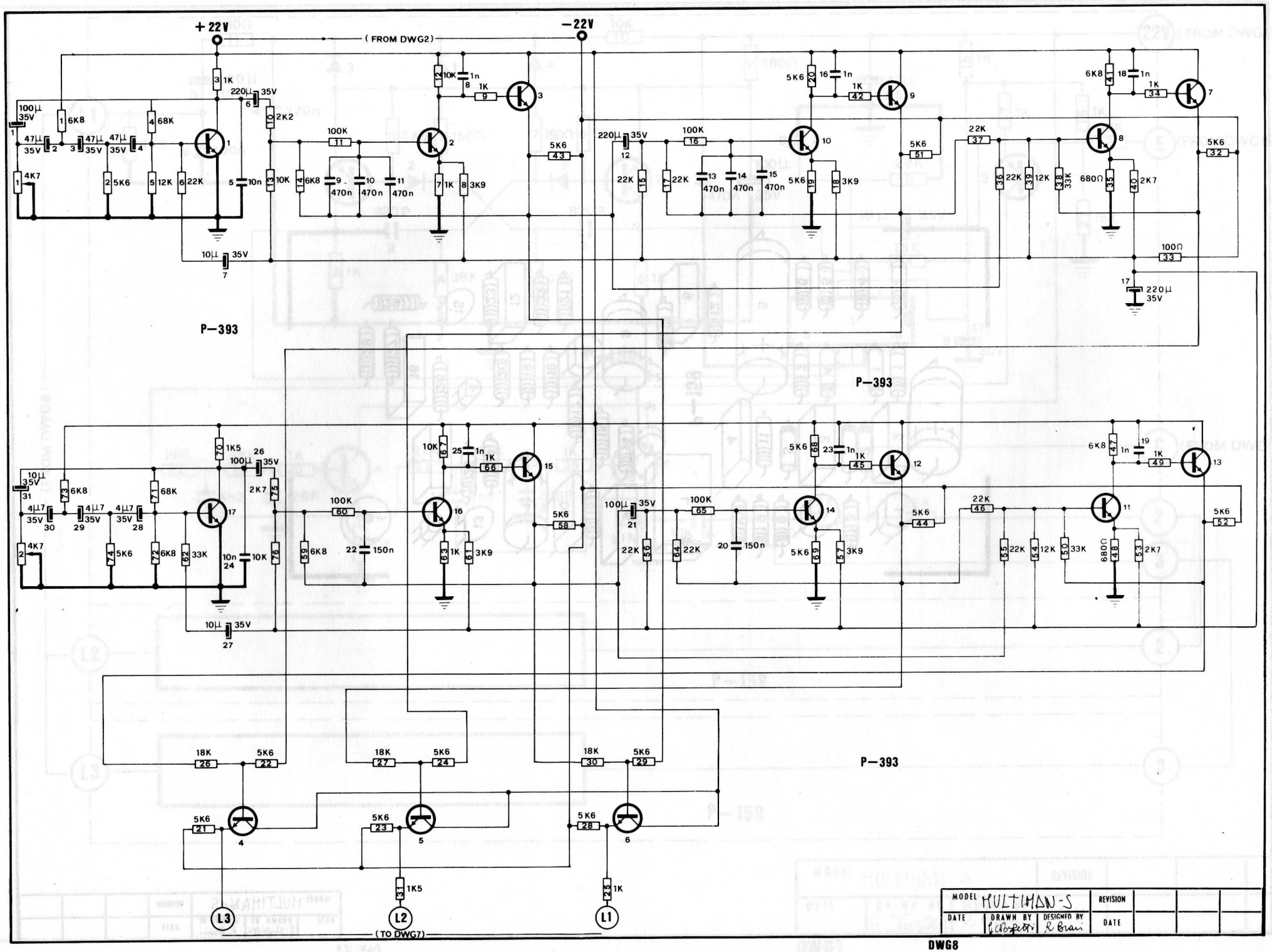
+22V
(FROM DWG2)
-22V
P-393
P-393
P-393
(TO DWG7)
L3
L2
L1
MODEL MULTIMAN-S
REVISION
DATE
DRAWN BY
DESIGNED BY
R Brain
DWG8

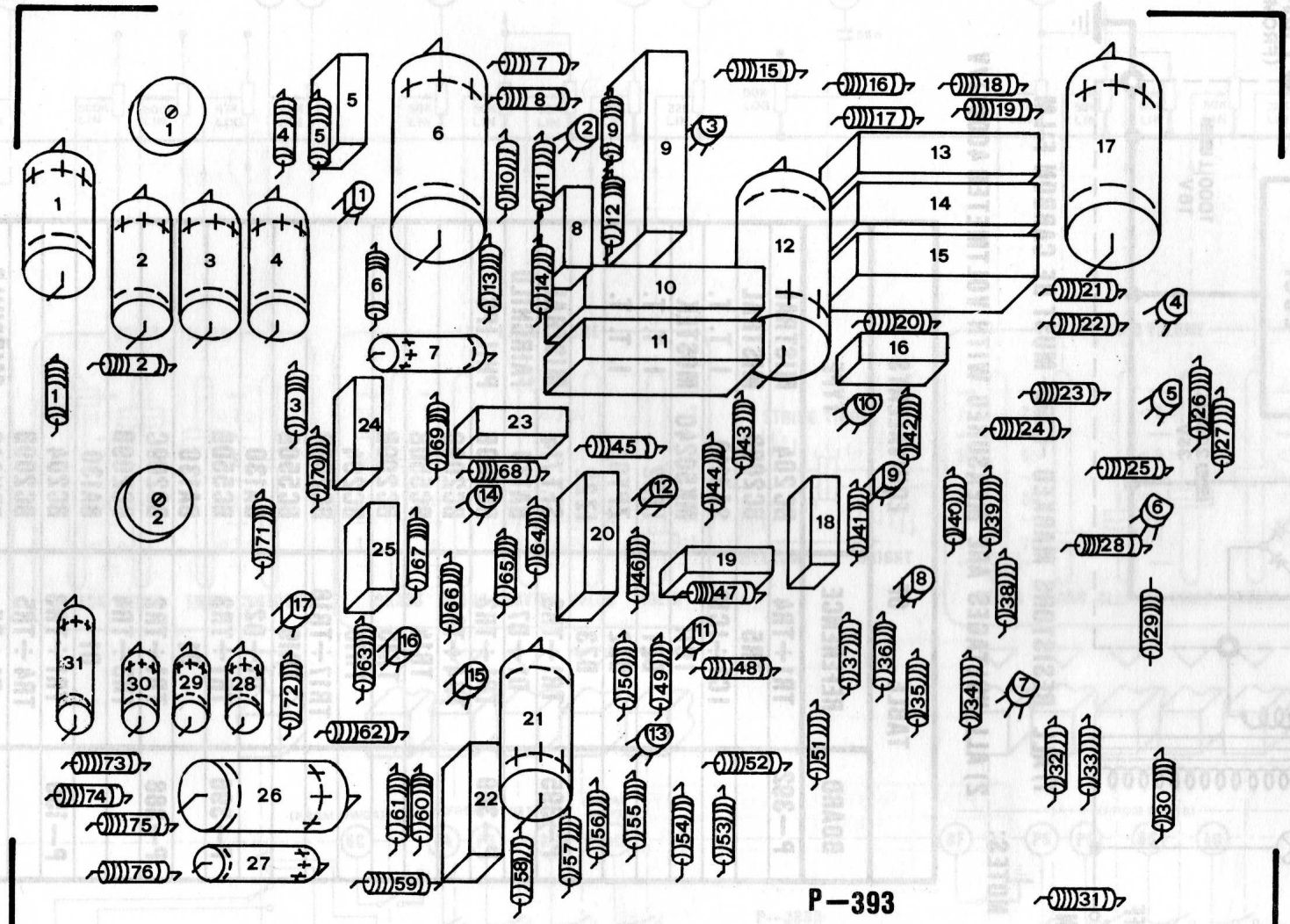

MODEL	MULTIMAN-S	REVISION			
DATE	DRAWN BY	DESIGNED BY	DATE		

DWG 8A

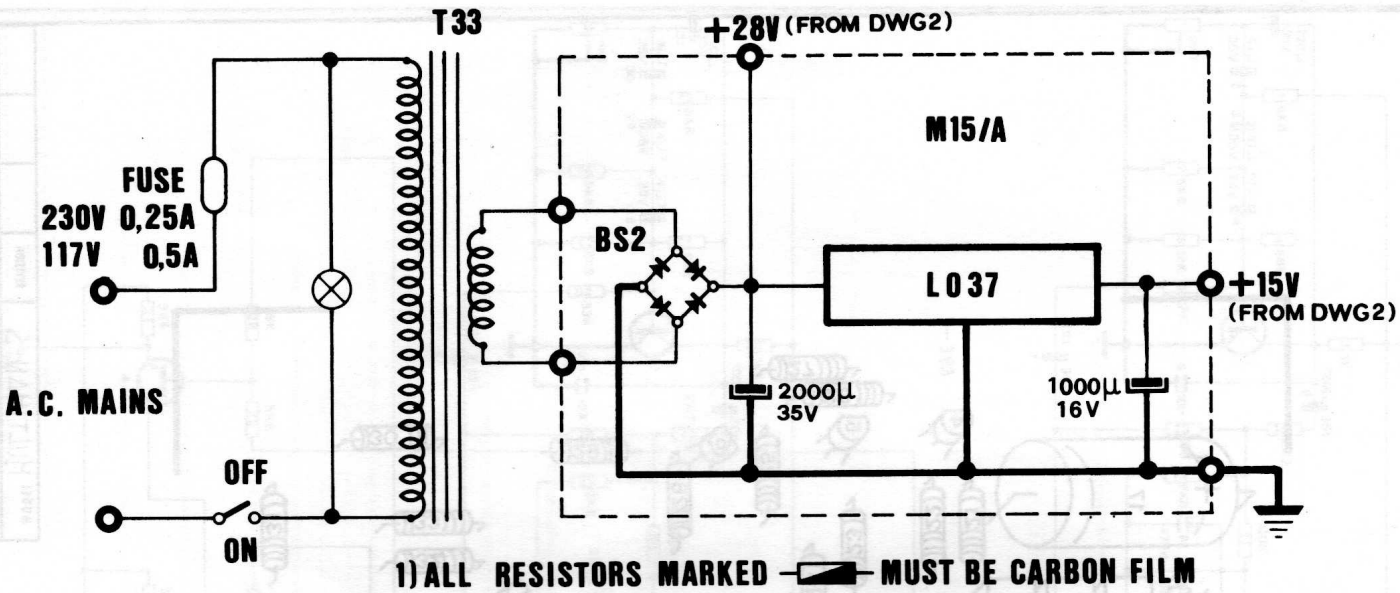

1) ALL RESISTORS MARKED —▬— MUST BE CARBON FILM

NOTES:

2) ALL VOLTAGES ARE MEASURED WITH VOLTMETER 4000Ω/V

TABLE OF EQUIVALENTS

BOARD	REFERENCE	TYPE	
P—392	TR1÷TR4	BC204	MISTRAL
	TR5	BC209B	MISTRAL
	IC1÷IC10	SAJ110	I. T. T.
	IC11	MK50240	MOSTEK
	DZ1	IZ22	I. T. T.
	DZ2	ZPY9,1	I. T. T.
	DZ3	IZ22	
P—395	TR1÷TR3	SFT714	MISTRAL
	D1÷D7	BA130	FAIRCHILD
P—389	TR1÷TR3	BC550B	PHILIPS
	TR4÷TR13	BC209C	
	TR14	BC550B	
	TR15	BC209B	
	TR16	BC204	
	TR17÷TR18	BC209B	
	TR19	BC550B	
	D1÷D2	BA130	
P—396	TR1÷TR3	BC550B	
	D1	BA130	
P—388	TR1÷TR2	BC209C	
	TR3÷TR4	BC209B	
	D1	BA130	
P—159	TR1÷TR3	BC204	
	TR4÷TR5	BC209B	
	D1÷D5	FDH900	FAIRCHILD
P—393	TR1	BC209C	
	TR2÷TR16	BC209B	
	TR17	BC209C	

MODEL MULTIMAN-S			REVISION			
DATE	DRAWN BY G. Rossetti	DESIGNED BY R. Brau	DATE			

DWG9

Massima azione a pot. al massimo e Contour a -9 V

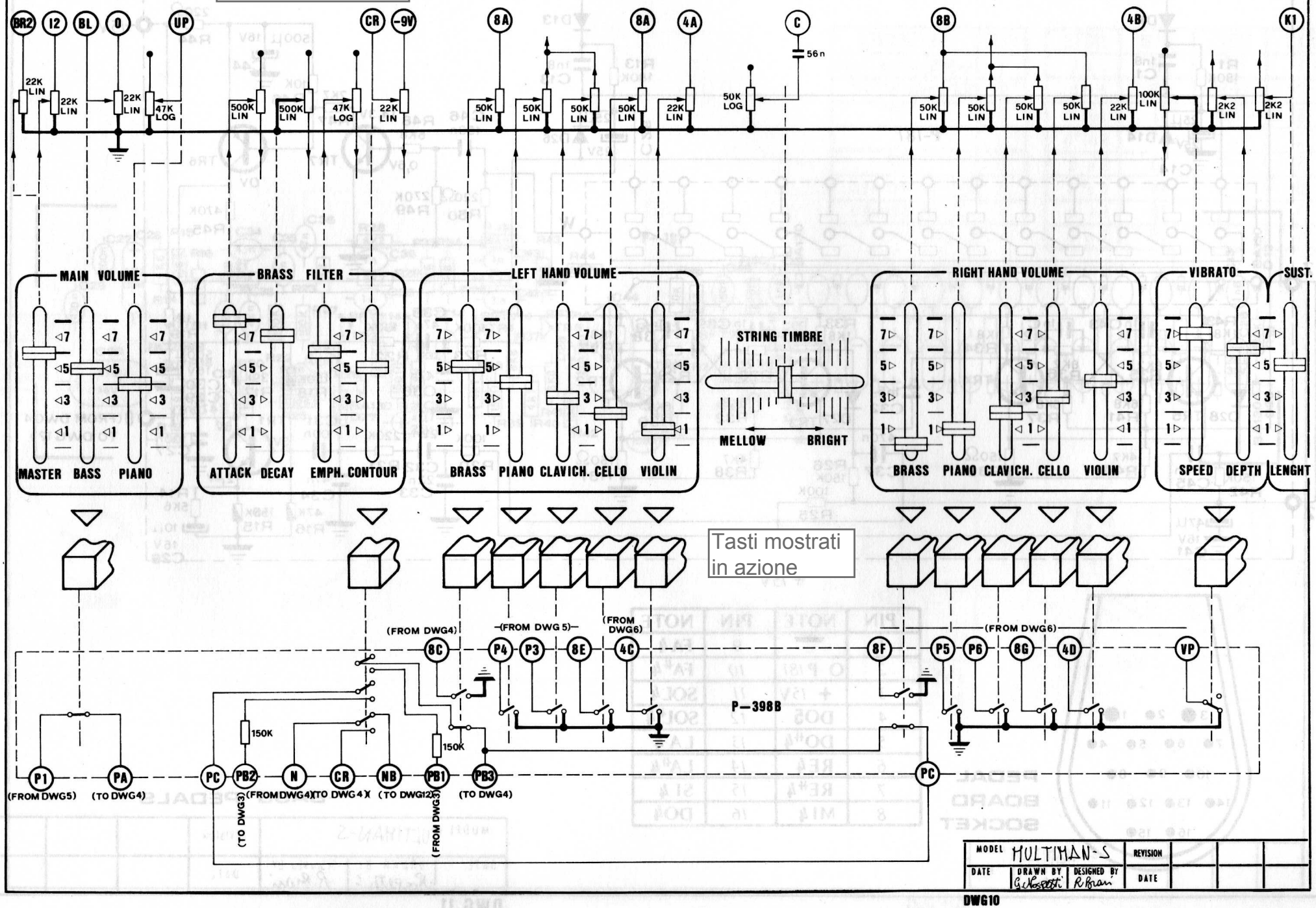

Tasti mostrati in azione

MODEL	MULTIMAN-S	REVISION			
DATE	DRAWN BY G. Nesotti	DESIGNED BY R. Bran	DATE		

DWG10

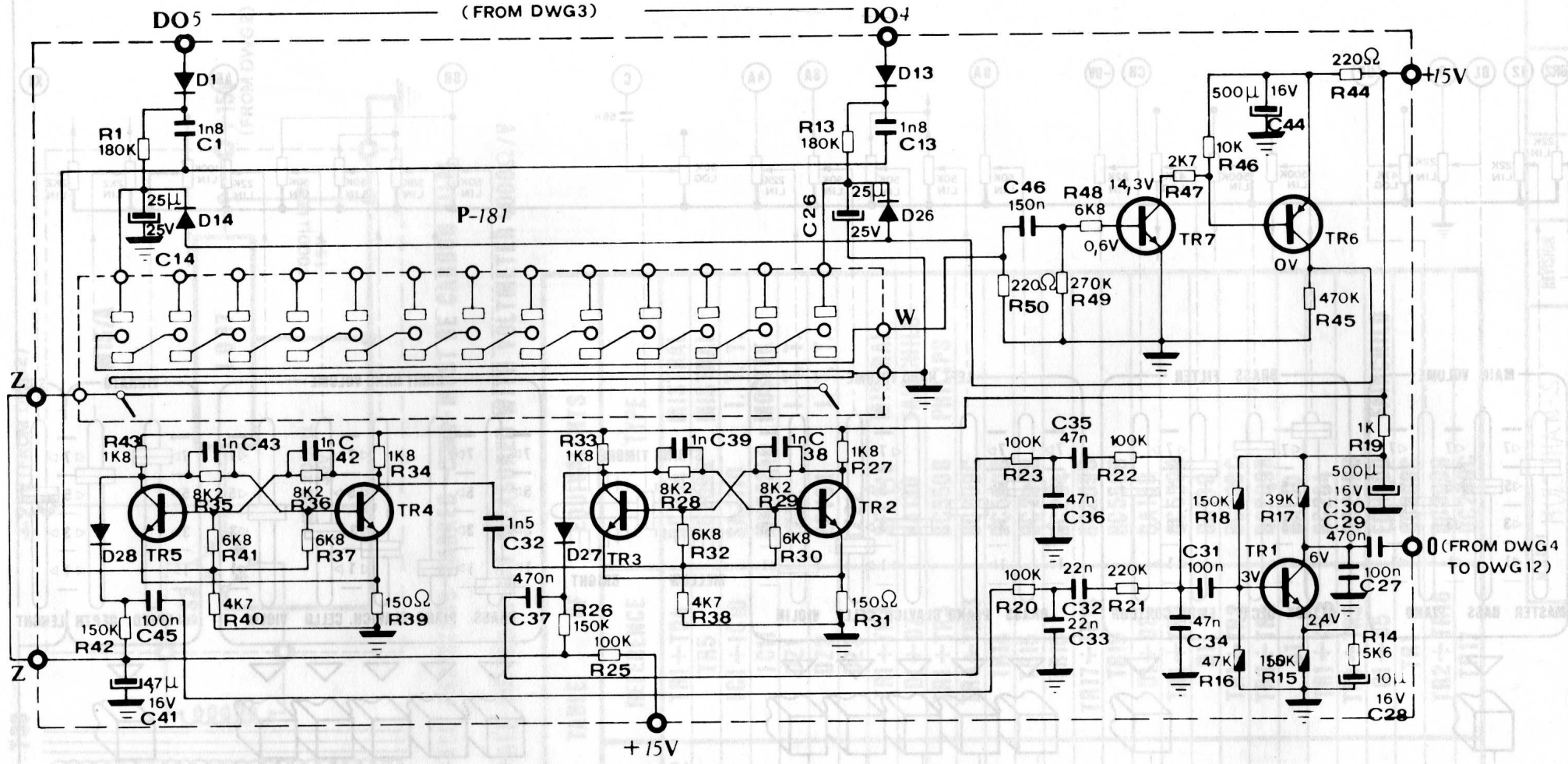

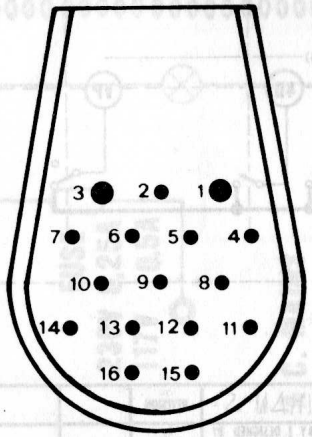

PEDAL BOARD SOCKET

PIN	NOTE	PIN	NOTE
1	⏚	9	FA 4
2	O·P 181	10	FA♯4
3	+ 15V	11	SOL4
4	DO5	12	SOL♯4
5	DO♯4	13	LA 4
6	RE4	14	LA♯4
7	RE♯4	15	SI 4
8	MI 4	16	DO4

BASS PEDALS

MODEL MULTIMAN-S		REVISION			
DATE	DRAWN BY Rospetti	DESIGNED BY R. Brani	DATE		

DWG 11

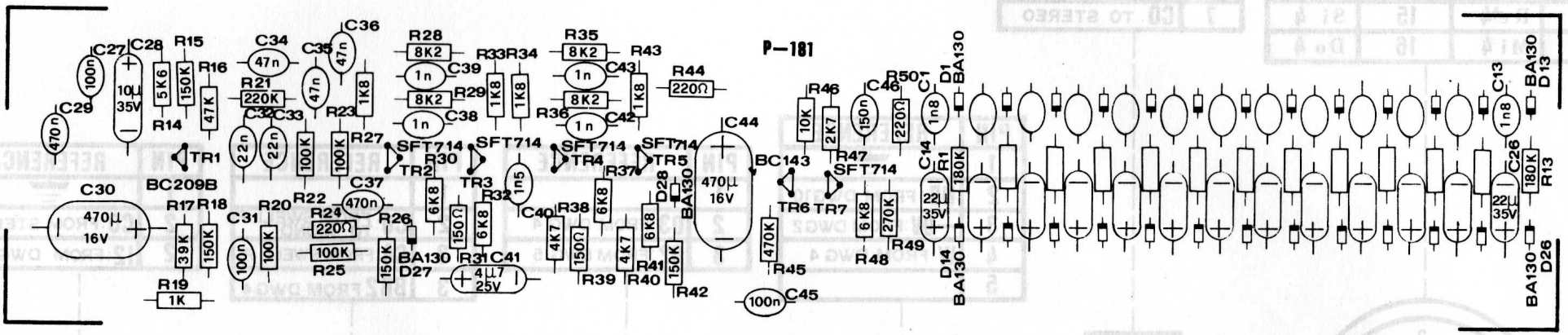

MODEL	MULTIMAN-S		REVISION			
DATE	DRAWN BY	DESIGNED BY	DATE			
		R Brain				

DWG 11Δ

PIN	NOTE	PIN	NOTE
1	⏚	9	Fa 4
2	0-P181	10	Fa#4
3	+15V	11	Sol 4
4	Do 5	12	Sol#4
5	Do#4	13	La 4
6	Re 4	14	La#4
7	Re#4	15	Si 4
8	Mi 4	16	Do 4

PEDAL BOARD

PIN	REFERENCE
1	+20V: FROM DWG2
2	K2: FROM DWG3
3	⏚
4	
5	⏚
6	CA: TO STEREO
7	CO: TO STEREO

SWELL PEDAL

PIN	REFERENCE
1	⏚
2	NB: FROM DWG10
3	−9V: FROM DWG2
4	W: FROM DWG 4
5	

PEDAL FILTER

PIN	REFERENCE
1	
2	03: FROM DWG 4
3	02: FROM DWG 5

PIANOS

PIN	REFERENCE
1	
2	CO: FROM SWELL P. TO MONO
3	CA: FROM SWELL P.
3	BR2 FROM DWG4

STEREO

PIN	REFERENCE
1	⏚
2	CO: FROM STEREO
2	I2: FROM DWG 4

MONO

CA

CO

MODEL	MULTIMAN-S	REVISION			
DATE	DRAWN BY: C. Rospetti	DESIGNED BY: R Brau	DATE		

DWG12

CRUMAR S.p.A.
60022 CASTELFIDARDO - ITALY
c/p 98
Tel. (071) 79033 / 34